1. ALL RESISTANCE VALUES ARE IN OHMS, 0.1 WATT +/- 5%.
2. ALL CAPACITANCE VALUES ARE IN MICROFARADS.
3. ALL CRYSTALS & OSCILLATOR VALUES ARE IN HERTZ.

REV	ECN	DESCRIPTION OF REVISION	CK APPD / DATE
5	0006232160	ENGINEERING RELEASED	2016-05-16

D111/121 MLB - Carrier

LAST_MODIFICATION=Mon May 16 22:31:09 2016

PAGE	<CSA>	CONTENTS	SYNC	DATE
1	<CSA_PAGE1>	TABLE OF CONTENTS	<SYNC_MASTER1>	<SYNC_DATE1>
2	<CSA_PAGE2>	SYSTEM:BOM TABLES	<SYNC_MASTER2>	<SYNC_DATE2>
3	<CSA_PAGE3>	SYSTEM:EEEE CALLOUTS	<SYNC_MASTER3>	<SYNC_DATE3>
4	<CSA_PAGE4>	SYSTEM:MECHANICAL COMPONENTS	<SYNC_MASTER4>	<SYNC_DATE4>
5	<CSA_PAGE5>	SYSTEM:TESTPOINTS, BOARDID	<SYNC_MASTER5>	<SYNC_DATE5>
6	<CSA_PAGE6>	spare	<SYNC_MASTER6>	<SYNC_DATE6>
7	<CSA_PAGE7>	SOC:JTAG,USB,XTAL	<SYNC_MASTER7>	<SYNC_DATE7>
8	<CSA_PAGE8>	SOC:PCIE	<SYNC_MASTER8>	<SYNC_DATE8>
9	<CSA_PAGE9>	SOC:MIPI AND ISP	<SYNC_MASTER9>	<SYNC_DATE9>
10	<CSA_PAGE10>	SOC:LPDP	<SYNC_MASTER10>	<SYNC_DATE10>
11	<CSA_PAGE11>	SOC:SERIAL	<SYNC_MASTER11>	<SYNC_DATE11>
12	<CSA_PAGE12>	SOC:GPIO & UART	<SYNC_MASTER12>	<SYNC_DATE12>
13	<CSA_PAGE13>	SOC:AOP	<SYNC_MASTER13>	<SYNC_DATE13>
14	<CSA_PAGE14>	SOC:POWER (1/3)	<SYNC_MASTER14>	<SYNC_DATE14>
15	<CSA_PAGE15>	SOC:POWER (2/3)	<SYNC_MASTER15>	<SYNC_DATE15>
16	<CSA_PAGE16>	SOC:POWER (3/3)	<SYNC_MASTER16>	<SYNC_DATE16>
17	<CSA_PAGE17>	NAND	<SYNC_MASTER17>	<SYNC_DATE17>
18	<CSA_PAGE18>	SYSTEM POWER:PMU (1/3)	<SYNC_MASTER18>	<SYNC_DATE18>
19	<CSA_PAGE19>	SYSTEM POWER:PMU (2/3)	<SYNC_MASTER19>	<SYNC_DATE19>
20	<CSA_PAGE20>	SYSTEM POWER:PMU (3/3)	<SYNC_MASTER20>	<SYNC_DATE20>
21	<CSA_PAGE21>	SYSTEM POWER:CHARGER	<SYNC_MASTER21>	<SYNC_DATE21>
22	<CSA_PAGE22>	SYSTEM POWER:BATTERY CONN	<SYNC_MASTER22>	<SYNC_DATE22>
23	<CSA_PAGE23>	SYSTEM POWER:BOOST	<SYNC_MASTER23>	<SYNC_DATE23>
24	<CSA_PAGE24>	SENSORS	<SYNC_MASTER24>	<SYNC_DATE24>
25	<CSA_PAGE25>	B2B FILTERS: UTAH	<SYNC_MASTER25>	<SYNC_DATE25>
26	<CSA_PAGE26>	CAMERA:STROBE DRIVER	<SYNC_MASTER26>	<SYNC_DATE26>
27	<CSA_PAGE27>	Accessory: Buck Circuit	<SYNC_MASTER27>	<SYNC_DATE27>
28	<CSA_PAGE28>	TRINITY:FF SPECIFIC	<SYNC_MASTER28>	<SYNC_DATE28>
29	<CSA_PAGE29>	B2B:FOREHEAD	<SYNC_MASTER29>	<SYNC_DATE29>
30	<CSA_PAGE30>	B2B:NEVADA	<SYNC_MASTER30>	<SYNC_DATE30>
31	<CSA_PAGE31>	AUDIO:CALTRA CODEC (1/2)	<SYNC_MASTER31>	<SYNC_DATE31>
32	<CSA_PAGE32>	AUDIO:CALTRA CODEC (2/2)	<SYNC_MASTER32>	<SYNC_DATE32>
33	<CSA_PAGE33>	AUDIO:SPEAKER AMP 2	<SYNC_MASTER33>	<SYNC_DATE33>
34	<CSA_PAGE34>	AUDIO:SPEAKER AMP 1	<SYNC_MASTER34>	<SYNC_DATE34>
35	<CSA_PAGE35>	ARC:DRIVER	<SYNC_MASTER35>	<SYNC_DATE35>
36	<CSA_PAGE36>	ARC:MAGGIE	<SYNC_MASTER36>	<SYNC_DATE36>
37	<CSA_PAGE37>	DISPLAY & MESA:POWER	<SYNC_MASTER37>	<SYNC_DATE37>
38	<CSA_PAGE38>	B2B:ORB & MESA	<SYNC_MASTER38>	<SYNC_DATE38>
39	<CSA_PAGE39>	B2B FILTERS: DISPLAY & TOUCH	<SYNC_MASTER39>	<SYNC_DATE39>
40	<CSA_PAGE40>	TRISTAR 2	<SYNC_MASTER40>	<SYNC_DATE40>
41	<CSA_PAGE41>	B2B:DOCK FLEX	<SYNC_MASTER41>	<SYNC_DATE41>
42	<CSA_PAGE42>	spare	<SYNC_MASTER42>	<SYNC_DATE42>
43	<CSA_PAGE43>	spare	<SYNC_MASTER43>	<SYNC_DATE43>
44	<CSA_PAGE44>	B2B FILTERS: RIGHT BUTTON FLEX	<SYNC_MASTER44>	<SYNC_DATE44>
45	<CSA_PAGE45>	B2B FF SPECIFIC	<SYNC_MASTER45>	<SYNC_DATE45>
46	<CSA_PAGE46>	LARGE FORM FACTOR SPECIFIC	<SYNC_MASTER46>	<SYNC_DATE46>
47	<CSA_PAGE47>	I2C MAP: AP, TOUCH, HOMER, I2C5	<SYNC_MASTER47>	<SYNC_DATE47>
48	<CSA_PAGE48>	I2C MAP AOP	<SYNC_MASTER48>	<SYNC_DATE48>
49	<CSA_PAGE49>	I2C TABLE	<SYNC_MASTER49>	<SYNC_DATE49>
50	<CSA_PAGE50>	spare	<SYNC_MASTER50>	<SYNC_DATE50>
51	<CSA_PAGE51>	spare	<SYNC_MASTER51>	<SYNC_DATE51>
52	<CSA_PAGE52>	MLB UNIQUE	<SYNC_MASTER52>	<SYNC_DATE52>
53	<CSA_PAGE53>	CELL,WIFI,NFC	<SYNC_MASTER53>	<SYNC_DATE53>
54	<CSA_PAGE54>	PAGE1	<SYNC_MASTER54>	<SYNC_DATE54>
55	<CSA_PAGE55>	BASEBAND	<SYNC_MASTER55>	<SYNC_DATE55>
56	<CSA_PAGE56>	BASEBAND MEMORY/DEBUG	<SYNC_MASTER56>	<SYNC_DATE56>
57	<CSA_PAGE57>	BASEBAND POWER	<SYNC_MASTER57>	<SYNC_DATE57>
58	<CSA_PAGE58>	BASEBAND PMIC	<SYNC_MASTER58>	<SYNC_DATE58>
59	<CSA_PAGE59>	TRANSCEIVERS	<SYNC_MASTER59>	<SYNC_DATE59>
60	<CSA_PAGE60>	ET MODULATOR	<SYNC_MASTER60>	<SYNC_DATE60>
61	<CSA_PAGE61>	TDD TRANSMIT	<SYNC_MASTER61>	<SYNC_DATE61>
62	<CSA_PAGE62>	FDD TRANSMIT	<SYNC_MASTER62>	<SYNC_DATE62>
63	<CSA_PAGE63>	PRIMARY RECEIVE	<SYNC_MASTER63>	<SYNC_DATE63>
64	<CSA_PAGE64>	LOWER ANTENNA & COUPLERS	<SYNC_MASTER64>	<SYNC_DATE64>
65	<CSA_PAGE65>	DIVERSITY RECEIVE ASM'S	<SYNC_MASTER65>	<SYNC_DATE65>
66	<CSA_PAGE66>	DIVERSITY RECEIVE LNA'S	<SYNC_MASTER66>	<SYNC_DATE66>
67	<CSA_PAGE67>	UPPER ANTENNA FEEDS	<SYNC_MASTER67>	<SYNC_DATE67>
68	<CSA_PAGE68>	GNSS	<SYNC_MASTER68>	<SYNC_DATE68>
69	<CSA_PAGE69>	TEST POINTS & SIM	<SYNC_MASTER69>	<SYNC_DATE69>
70	<CSA_PAGE70>	spare	<SYNC_MASTER70>	<SYNC_DATE70>
71	<CSA_PAGE71>	spare	<SYNC_MASTER71>	<SYNC_DATE71>
72	<CSA_PAGE72>	spare	<SYNC_MASTER72>	<SYNC_DATE72>
73	<CSA_PAGE73>	spare	<SYNC_MASTER73>	<SYNC_DATE73>
74	<CSA_PAGE74>	page1	<SYNC_MASTER74>	<SYNC_DATE74>
75	<CSA_PAGE75>	NFC	<SYNC_MASTER75>	<SYNC_DATE75>
76	<CSA_PAGE76>	page1	<SYNC_MASTER76>	<SYNC_DATE76>
77	<CSA_PAGE77>	METROCIRC	<SYNC_MASTER77>	<SYNC_DATE77>
78	<CSA_PAGE78>	UAT MATCH & TUNER	<SYNC_MASTER78>	<SYNC_DATE78>
79	<CSA_PAGE79>	WIFI_MLB SCHEMATIC	<SYNC_MASTER79>	<SYNC_DATE79>
80	<CSA_PAGE80>	PERENNIAL	<SYNC_MASTER80>	<SYNC_DATE80>
81	<CSA_PAGE81>	WIFI FRONT-END [77]	<SYNC_MASTER81>	<SYNC_DATE81>
	<CSA_PAGE82>		<SYNC_MASTER82>	<SYNC_DATE82>
	<CSA_PAGE83>		<SYNC_MASTER83>	<SYNC_DATE83>
	<CSA_PAGE84>		<SYNC_MASTER84>	<SYNC_DATE84>
	<CSA_PAGE85>		<SYNC_MASTER85>	<SYNC_DATE85>
	<CSA_PAGE86>		<SYNC_MASTER86>	<SYNC_DATE86>
	<CSA_PAGE87>		<SYNC_MASTER87>	<SYNC_DATE87>
	<CSA_PAGE88>		<SYNC_MASTER88>	<SYNC_DATE88>
	<CSA_PAGE89>		<SYNC_MASTER89>	<SYNC_DATE89>
	<CSA_PAGE90>		<SYNC_MASTER90>	<SYNC_DATE90>

SCH 051-00542
BRD 820-00249
MCO 056-01585

Schematic & PCB Callouts

PART#	QTY	DESCRIPTION	REFERENCE DESIGNATOR(S)	CRITICAL	BOM OPTION
051-00542	1	SCH,MLB,D111/121	SCH	CRITICAL	?
820-00249	1	PCBF,MLB,D111/121	PCB	CRITICAL	?

System Block Diagram

<rdar://problem/16684269>

NAND BOM Options

PART#	QTY	DESCRIPTION	REFERENCE DESIGNATOR(S)	CRITICAL	BOM OPTION
335S00169	1	NAND,H,32GB,16nm,MLC	U1701	CRITICAL	NAND_32G
335S00182	1	NAND,H,128GB,16nm,TLC	U1701	CRITICAL	NAND_128G
335S00156	1	NAND,H,256GB,3Dv3,TLC	U1701	CRITICAL	NAND_256G
138S0867	6	CAP,X5R,100F,20%,6.3V,0.65MM,HRSTL,0402	C1748,C1713,C1714,C1719,C1721,C1733	CRITICAL	NAND_32G
138S00003	6	CAP,X5R,150F,20%,,6.3V,0.65MM,HRSTL,0402	C1748,C1713,C1714,C1719,C1721,C1733	CRITICAL	NAND_128G
138S00003	6	CAP,X5R,150F,20%,,6.3V,0.65MM,HRSTL,0402	C1748,C1713,C1714,C1719,C1721,C1733	CRITICAL	NAND_256G

PART NUMBER	ALTERNATE FOR PART NUMBER	BOM OPTION	REF DES	COMMENTS:
335S00201	335S00169	ALTERNATE	U1701	T,15nm,MLC,32GB
335S00209	335S00169	ALTERNATE	U1701	S,16nm,MLC,32GB
335S00195	335S00182	ALTERNATE	U1701	SS,1Ynm,TLC,128GB
335S00180	335S00182	ALTERNATE	U1701	T,15nm,TLC,128GB
335S00179	335S00182	ALTERNATE	U1701	SD,15nm,TLC,128GB
335S00148	335S00183	ALTERNATE	U1701	SD,3Dv2,TLC,256GB
335S00190	335S00183	ALTERNATE	U1701	SS,3Dv3,TLC,256GB

#22686038:See Radar

CAYMAN DDR Alternates

PART NUMBER	ALTERNATE FOR PART NUMBER	BOM OPTION	REF DES	COMMENTS:
339S00254	339S00253	ALTERNATE	ALL	DDR-H, 2G, B1
339S00255	339S00253	ALTERNATE	ALL	DDR-S, 2G, B1
339S00257	339S00253	ALTERNATE	ALL	DDR-H, 3G, B1
339S00258	339S00253	ALTERNATE	ALL	DDR-S, 3G, B1
339S00256	339S00253	ALTERNATE	ALL	DDR-M, 3G, B1

Magnesium Alternates

PART NUMBER	ALTERNATE FOR PART NUMBER	BOM OPTION	REF DES	COMMENTS:
338S00173	338S00203	ALTERNATE	U2402	Larger Wafer (~29 fine) Magnesium

Carbon Alternates

PART NUMBER	ALTERNATE FOR PART NUMBER	BOM OPTION	REF DES	COMMENTS:
338S00087	338S00226	ALTERNATE	U2401,U2404	Updated version of Carbon

Phosphorous Alternates

PART NUMBER	ALTERNATE FOR PART NUMBER	BOM OPTION	REF DES	COMMENTS:
338S00230	338S00188	ALTERNATE	U2403	2T version of Phosphorous

UT LDO Alternates

PART NUMBER	ALTERNATE FOR PART NUMBER	BOM OPTION	REF DES	COMMENTS:
353S00889	353S00015	ALTERNATE	U2501	ST, LDO REG, 2.925V, CSP 0.45x0.45

Mamba LDO Alternates

PART NUMBER	ALTERNATE FOR PART NUMBER	BOM OPTION	REF DES	COMMENTS:
353S00932	353S00576	ALTERNATE	U3801	ST, LDO REG, 2.75V

EEPROM Alternate

PART NUMBER	ALTERNATE FOR PART NUMBER	BOM OPTION	REF DES	COMMENTS:
335S00234	335S00233	ALTERNATE	U1101	IC,EEPROM,16KXB,2.8V,12C,WLCSP4,CMOSEN1

Active Diode Alternate

PART NUMBER	ALTERNATE FOR PART NUMBER	BOM OPTION	REF DES	COMMENTS:
376S00106	376S00047	ALTERNATE	Q2101	DIODES INC. ACT DIODE

DDR PLL Alternate

PART NUMBER	ALTERNATE FOR PART NUMBER	BOM OPTION	REF DES	COMMENTS:
155S00095	155S00068	ALTERNATE	FL1501	FERR BD,1000OHM,25%,100MA,200MA,01005

Power Inductor Alternates

PART NUMBER	ALTERNATE FOR PART NUMBER	BOM OPTION	REF DES	COMMENTS:	
152S00118	152S00075	ALTERNATE	ALL	IND,PWR,0802L1.2 UH,7.0A,0.085 OHM,2016	
152S00077	152S00397	ALTERNATE	ALL	IND,PWR,0802L1.0 UH,2.25A,0.150 OHM,2016	updated 11/12
152S00121	152S00081	ALTERNATE	ALL	IND,PWR,0802L0.47 UH,3.8A,0.048 OHM,2012	
152S00123	152S1936	ALTERNATE	ALL	IND,PWR,0802L15 UH,0.72A,0.905 OHM,3225	
152S00402	152S00366	ALTERNATE	ALL	IND,MULT,10L1.2A,0.320 OHM,0603	updated 11/12
152S00297	152S1843	ALTERNATE	ALL	CYNTEC 2012 10H	reverted 11/13
152S00365	152S00297	ALTERNATE	ALL	CYNTEC 2012 10H	
152S00398	152S00204	ALTERNATE	ALL	IND,PWR,0.22UH,20%,4.7a,20MOHM,2012	For Chestnut inductor; so it doesn't interfere with PMU inducotr Buck 7 alts
152S00120	152S00077	ALTERNATE	ALL	For Chestnut inductor only	Except BUCK5 LX (BUCK5 LX is Taiyo only)
152S00117	152S00074	ALTERNATE	LOWLOSSLOWLOSS	IND,PWR,0802L1.0 UH,3.0A,0.060 OHM,2016	

Global R/C Alternates

PART NUMBER	ALTERNATE FOR PART NUMBER	BOM OPTION	REF DES	COMMENTS:
118S0764	118S0717	ALTERNATE	ALL	RES, 3.92K, 0.1W, 0201
138S0702	138S0657	ALTERNATE	ALL	CAP, X5R, 4.3UF, 4V, 0610
138S00006	138S0835	ALTERNATE	ALL	CAP, 3-TERM, 4.3UF, 4V, 0402
138S00005	138S00003	ALTERNATE	ALL	CAP,X5R,150F,6.3V,0.65MM,0402,TAIYO
138S00048	138S00003	ALTERNATE	ALL	CAP,X5R,150F,6.3V,0.65MM,0402,KYOCERA
138S0648	138S0652	ALTERNATE	ALL	CAP,X5R,4.70F,6.3V,0.45MM,0402,TAIYO
132S0400	132S0436	ALTERNATE	ALL	CAP,X5R,0.220F,6.3V,01005,TDK
138S00024	138S0986	ALTERNATE	ALL	CAP,CBL3-5MMx7.50F,25%,45/60Z,TAIYO/TDK
138S0706	138S0739	ALTERNATE	ALL	CAP,CER,10F,25%,10V,X5R,0201,MURATA
138S0945	138S0739	ALTERNATE	ALL	CAP,CER,10F,25%,10V,X5R,0201,KYOCERA
132S0436	132S0400	ALTERNATE	ALL	CAP,CER,X5R,0.220F,25%,6.3V,25%
138S00117	138S00071	ALTERNATE	ALL	CAP,X5R,40F,0201L,6.3V,20%, KYOCERA	New in Carrier, per #25737217

Global Ferrite Alternates

PART NUMBER	ALTERNATE FOR PART NUMBER	BOM OPTION	REF DES	COMMENTS:
155S00067	155S0581	ALTERNATE	ALL	FERR, 240OHM, 0.380HM DCR, 0201
155S0581	155S00067	ALTERNATE	ALL	FERR, 240OHM, 0.380HM DCR, 0201
155S00012	155S00168	ALTERNATE	ALL	FLTR, 65 OHMS, 0605
155S00194	155S0610	ALTERNATE	ALL	FERR BD, 150OHM, TDK
155S0885	155S0610	ALTERNATE	ALL	FERR BD, 150OHM, TY
152S00489	152S00456	ALTERNATE	ALL	FERR BD, 0.47UH, TY

Global Varistor Alternates

PART NUMBER	ALTERNATE FOR PART NUMBER	BOM OPTION	REF DES	COMMENTS:
377S0168	377S0140	ALTERNATE	ALL	VARISTOR, 6.8V, 100PF, 01005

ACC BUCK Alternates

PART NUMBER	ALTERNATE FOR PART NUMBER	BOM OPTION	REF DES	COMMENTS:
371S00087	371S00064	ALTERNATE	D2700	DIODE,SHOTTKY,30V,200MA,0201
152S00558	152S00557	ALTERNATE	L2700	IND,MLD,0.47UH,2.5A,85MOhm,1608

D111 EEEE CALLOUTS

PART#	QTY	DESCRIPTION	REFERENCE DESIGNATOR(S)	CRITICAL	BOM OPTION
825-6838	1	EEEE CODE FOR 639-01824	EEEE_GY4R	CRITICAL	EEEE_D111_BEST
825-6838	1	EEEE CODE FOR 639-01825	EEEE_GY4T	CRITICAL	EEEE_D111_SUPREME
825-6838	1	EEEE CODE FOR 639-01826	EEEE_GY4V	CRITICAL	EEEE_D111_EXTREME

PART NUMBER	ALTERNATE FOR PART NUMBER	BOM OPTION	REF DES	COMMENTS:
138S00049	138S00032	ALTERNATE	ALL	CAP,CER,X5R,2,20P,2016,3V,25%, KYOCERA
138S0831	138S00032	ALTERNATE	ALL	CAP,CER,X5R,2,20P,2016,6.3V,25%,MURATA

Current as of D11 MCO 056-01585 rev. 63

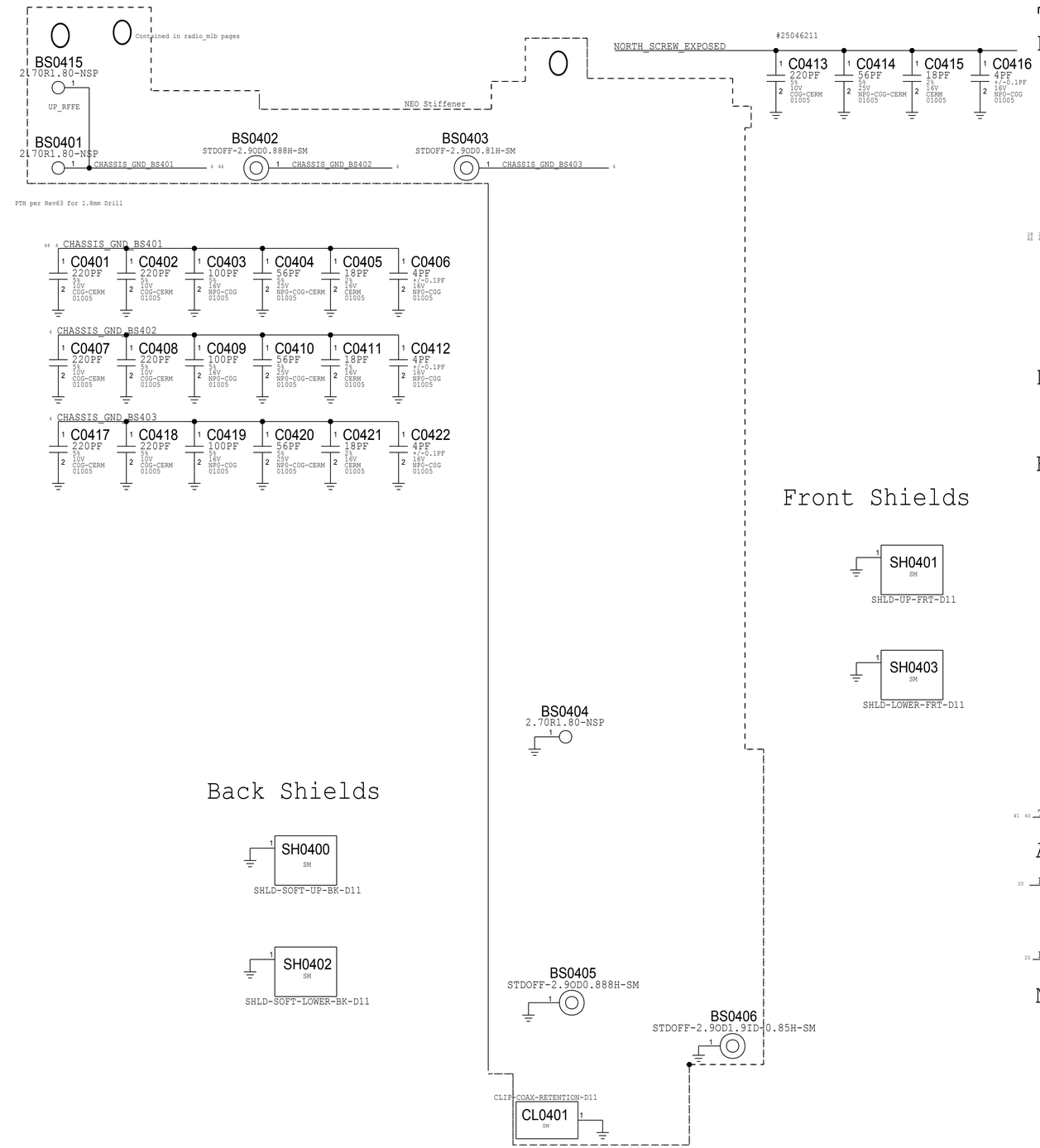

Front Shields

Back Shields

TESTPOINTS

POWER

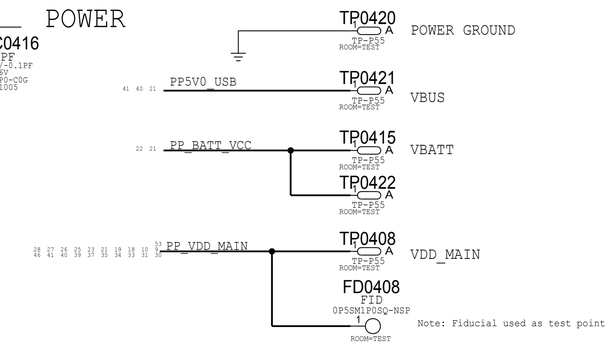

LCM

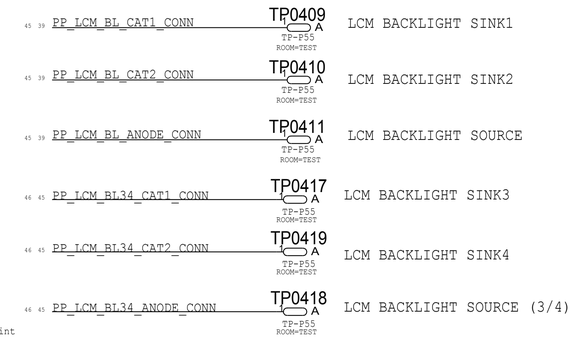

DFU

E75

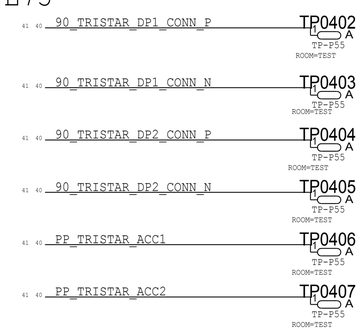

AMUX

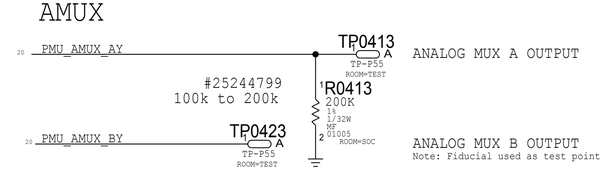

MOJAVE

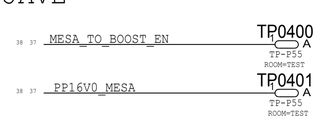

FIDUCIALS

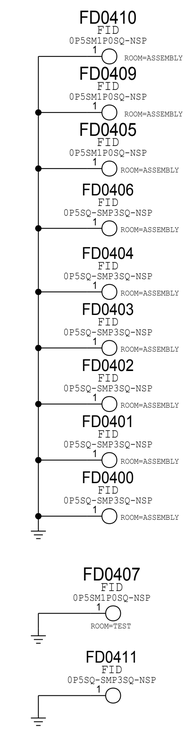

TOP SIDE

BOOTSTRAPPING:BOARD REV
BOARD ID
BOOT CONFIG

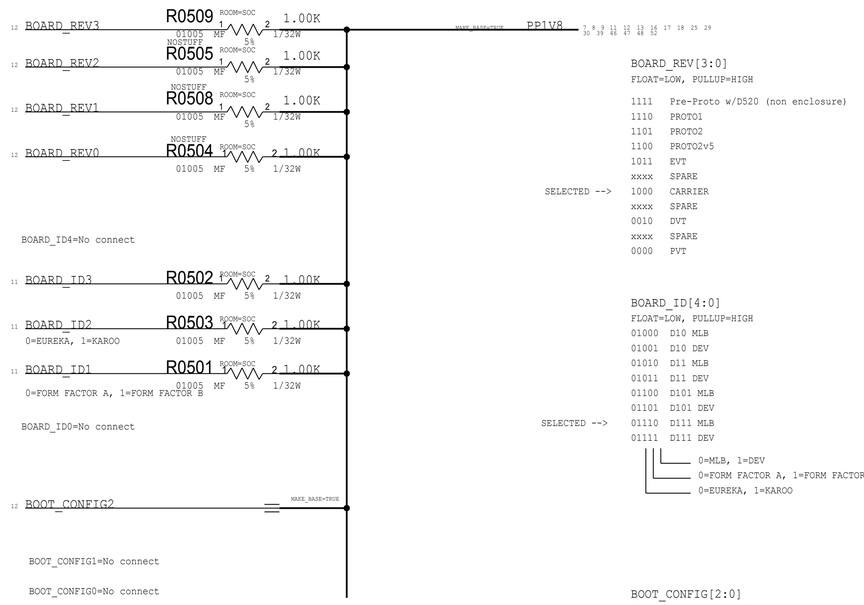

BOARD_REV[3:0]
FLOAT=LOW, PULLUP=HIGH

	1111	Pre-Proto w/D520 (non enclosure)
	1110	PROTO1
	1101	PROTO2
	1100	PROTO2v5
	1011	EVT
	xxxx	SPARE
SELECTED -->	1000	CARRIER
	xxxx	SPARE
	0010	DVT
	xxxx	SPARE
	0000	PVT

BOARD_ID[4:0]
FLOAT=LOW, PULLUP=HIGH

	01000	D10 MLB
	01001	D10 DEV
	01010	D11 MLB
	01011	D11 DEV
	01100	D101 MLB
	01101	D101 DEV
SELECTED -->	01110	D111 MLB
	01111	D111 DEV

0=MLB, 1=DEV
0=FORM FACTOR A, 1=FORM FACTOR B
0=EUREKA, 1=KAROO

BOOT_CONFIG[2:0]
FLOAT=LOW, PULLUP=HIGH

	000	SPI0
	001	SPI0 TEST MODE
	010	NVME0_X2
	011	NVME0 X2 TEST
SELECTED -->	100	NVME0 X1
	101	NVME0 X1 TEST
	110	SLOW SPI0 TEST
	111	FAST SPI0 TEST

SOC - USB, JTAG, XTAL

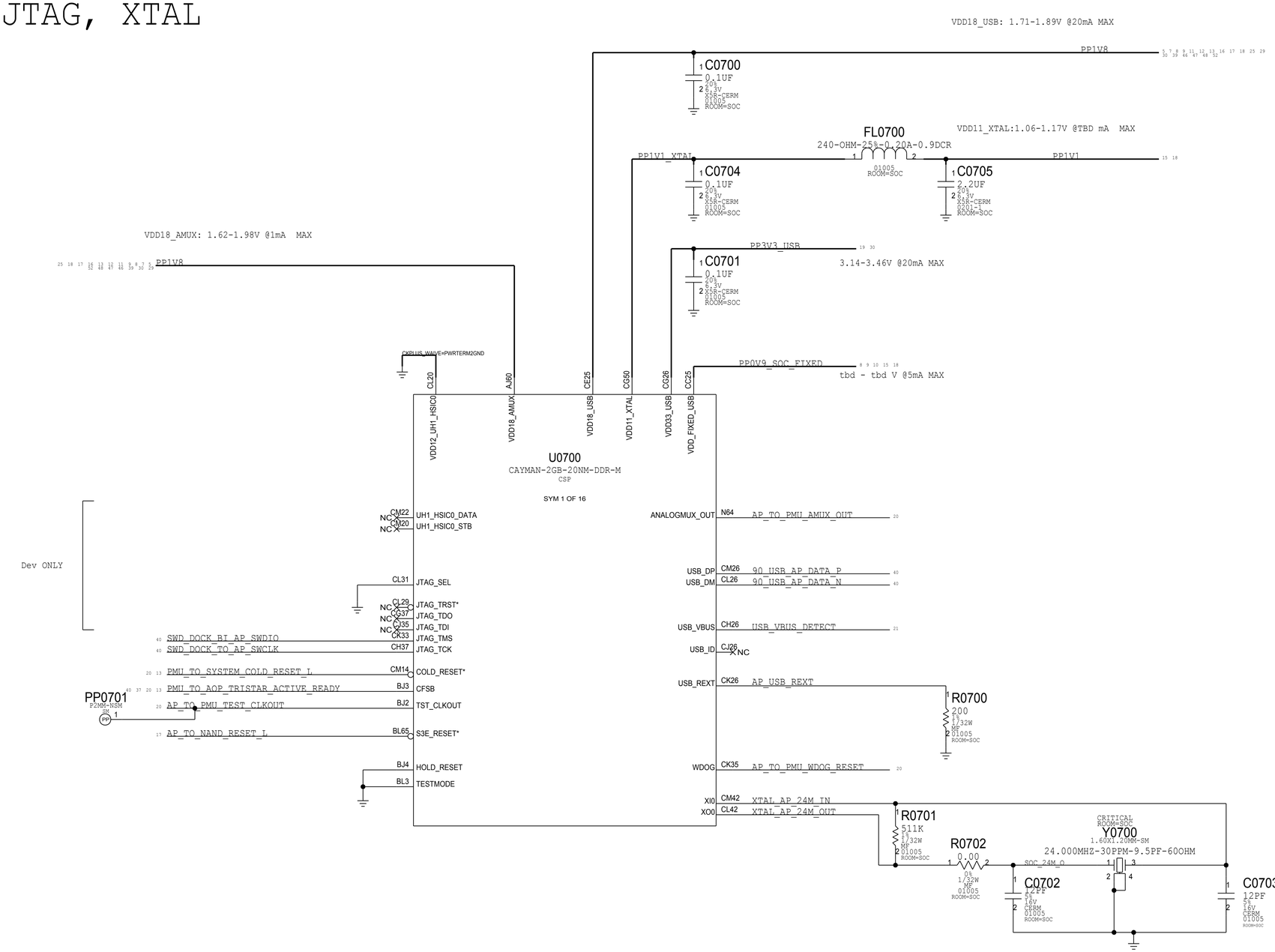

SOC - PCIE INTERFACES

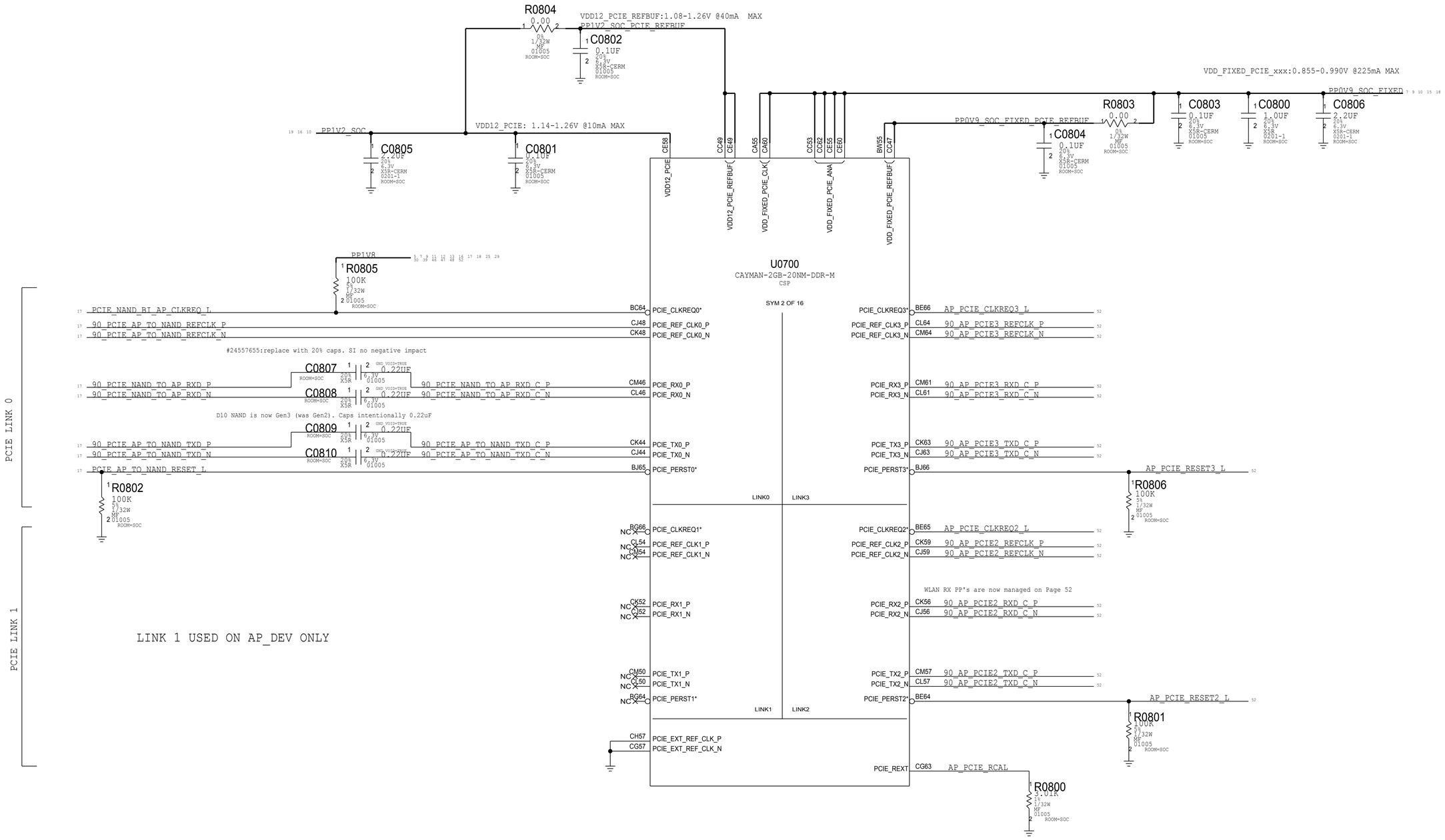

SOC - MIPI & ISP INTERFACES

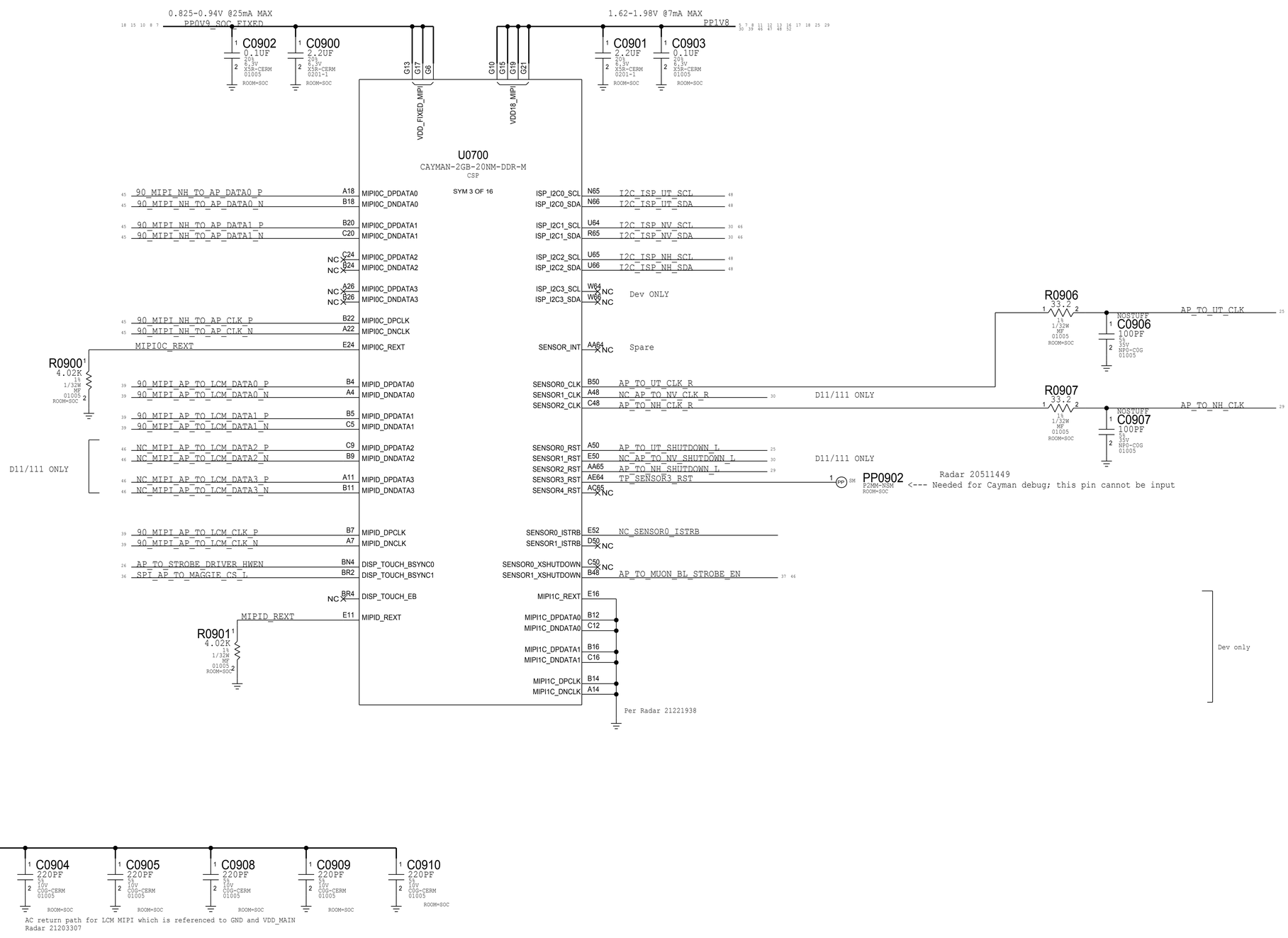

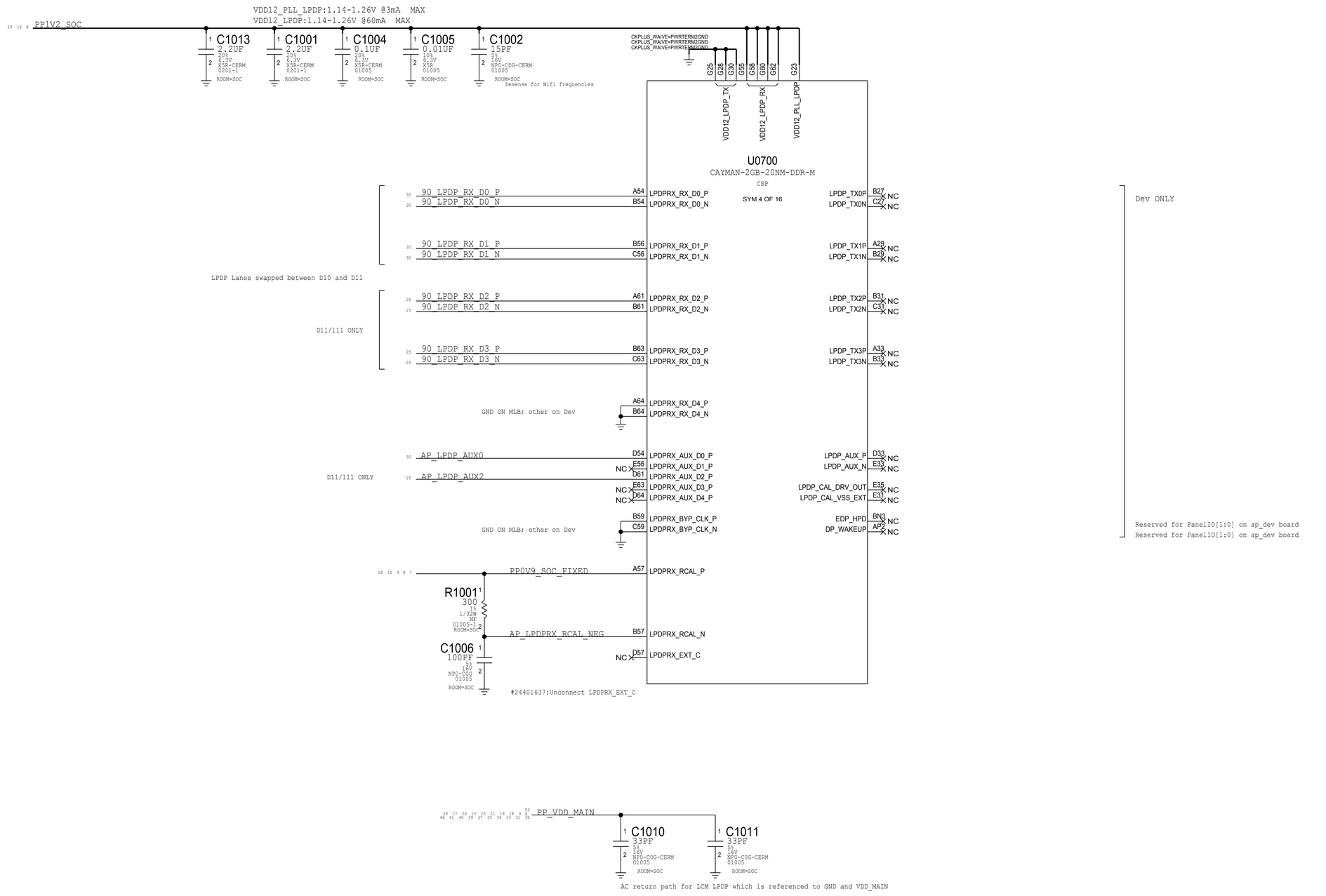
VDD12_PLL_LPDP:1.14-1.26V @3mA MAX
VDD12_LPDP:1.14-1.26V @60mA MAX
PP1V2_SOC
C1013 2.2UF 20% 6.3V X5R-CERM 0201-1 ROOM=SOC
C1001 2.2UF 20% 6.3V X5R-CERM 0201-1 ROOM=SOC
C1004 0.1UF 10% 6.3V X5R 01005 ROOM=SOC
C1005 0.01UF 10% 6.3V X5R 01005 ROOM=SOC
C1002 15PF 5% 16V NPO-COG-CERM 01005 ROOM=SOC
Desense for Wifi frequencies
CKPLUS_WAIVE=PWRTERM2GND
CKPLUS_WAIVE=PWRTERM2GND
CKPLUS_WAIVE=PWRTERM2GND
G25 G28 G30 G55 G58 G60 G62 G23
VDD12_LPDP_TX
VDD12_LPDP_RX
VDD12_PLL_LPDP
U0700
CAYMAN-2GB-20NM-DDR-M
CSP
SYM 4 OF 16
90_LPDP_RX_D0_P A54 LPDPRX_RX_D0_P
90_LPDP_RX_D0_N B54 LPDPRX_RX_D0_N
90_LPDP_RX_D1_P B56 LPDPRX_RX_D1_P
90_LPDP_RX_D1_N C56 LPDPRX_RX_D1_N
LPDP Lanes swapped between D10 and D11
90_LPDP_RX_D2_P A61 LPDPRX_RX_D2_P
90_LPDP_RX_D2_N B61 LPDPRX_RX_D2_N
D11/111 ONLY
90_LPDP_RX_D3_P B63 LPDPRX_RX_D3_P
90_LPDP_RX_D3_N C63 LPDPRX_RX_D3_N
A64 LPDPRX_RX_D4_P
B64 LPDPRX_RX_D4_N
GND ON MLB; other on Dev
AP_LPDP_AUX0 D54 LPDPRX_AUX_D0_P
NC E56 LPDPRX_AUX_D1_P
D11/111 ONLY AP_LPDP_AUX2 D61 LPDPRX_AUX_D2_P
NC E63 LPDPRX_AUX_D3_P
NC D64 LPDPRX_AUX_D4_P
B59 LPDPRX_BYP_CLK_P
C59 LPDPRX_BYP_CLK_N
GND ON MLB; other on Dev
PP0V9_SOC_FIXED A57 LPDPRX_RCAL_P
R1001 300 1% 1/32W MF 01005-1 ROOM=SOC
AP_LPDPRX_RCAL_NEG B57 LPDPRX_RCAL_N
C1006 100PF 5% 16V NPO-COG 01005 ROOM=SOC
NC D57 LPDPRX_EXT_C
#24401637:Unconnect LPDPRX_EXT_C
LPDP_TX0P B27 NC
LPDP_TX0N C27 NC
LPDP_TX1P A29 NC
LPDP_TX1N B29 NC
LPDP_TX2P B31 NC
LPDP_TX2N C31 NC
LPDP_TX3P A33 NC
LPDP_TX3N B33 NC
LPDP_AUX_P D33 NC
LPDP_AUX_N E33 NC
LPDP_CAL_DRV_OUT E35 NC
LPDP_CAL_VSS_EXT E31 NC
EDP_HPD BN3 NC
DP_WAKEUP AP2 NC
Dev ONLY
Reserved for PanelID[1:0] on ap_dev board
Reserved for PanelID[1:0] on ap_dev board
PP_VDD_MAIN
C1010 33PF 5% 16V NPO-COG-CERM 01005 ROOM=SOC
C1011 33PF 5% 16V NPO-COG-CERM 01005 ROOM=SOC
AC return path for LCM LPDP which is referenced to GND and VDD_MAIN

SOC - SERIAL INTERFACES

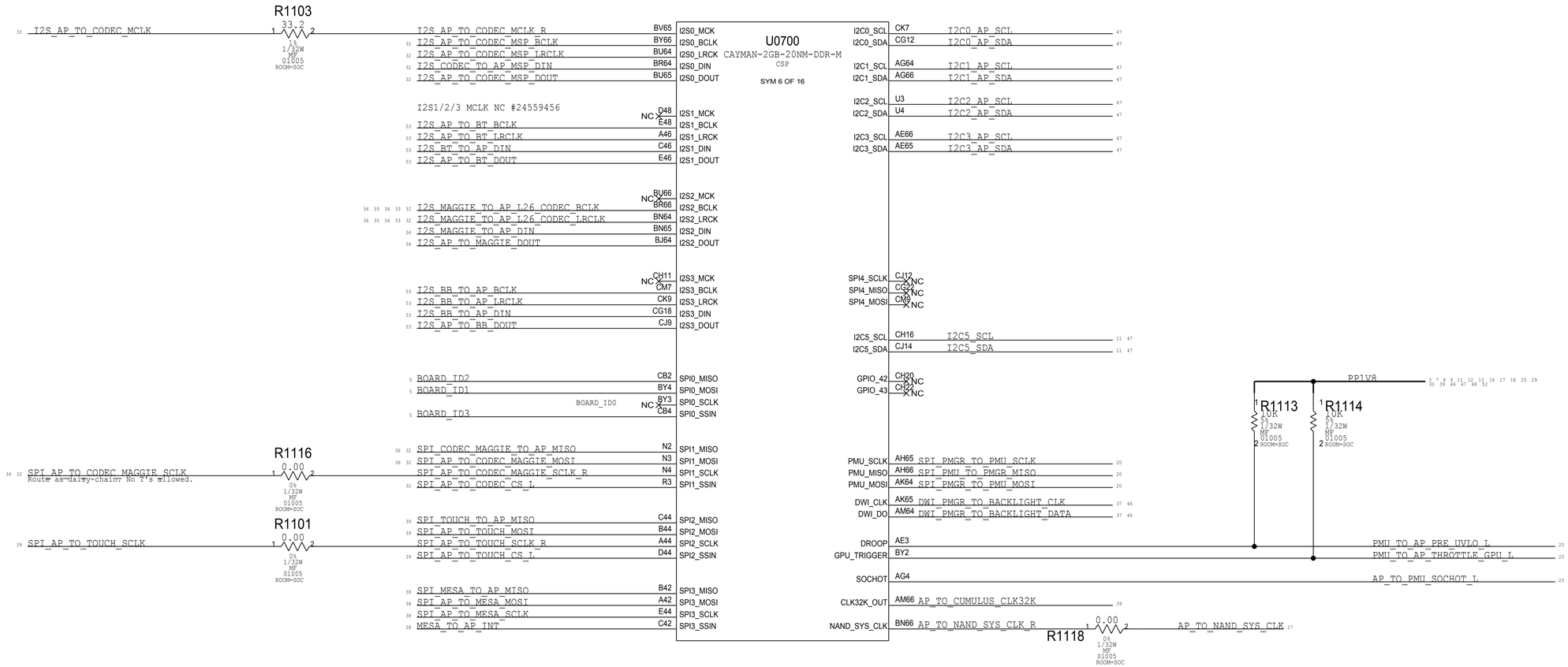

I2C5
See Radar#25316444 for Details

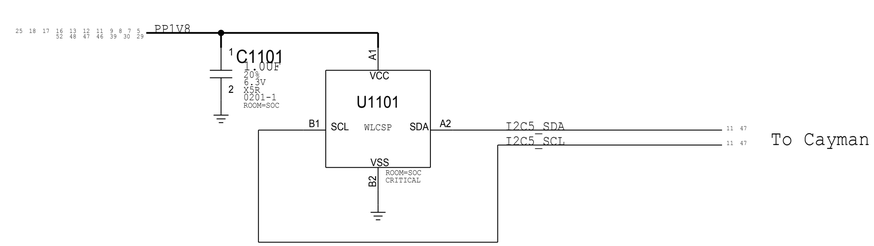

SOC - GPIO INTERFACES

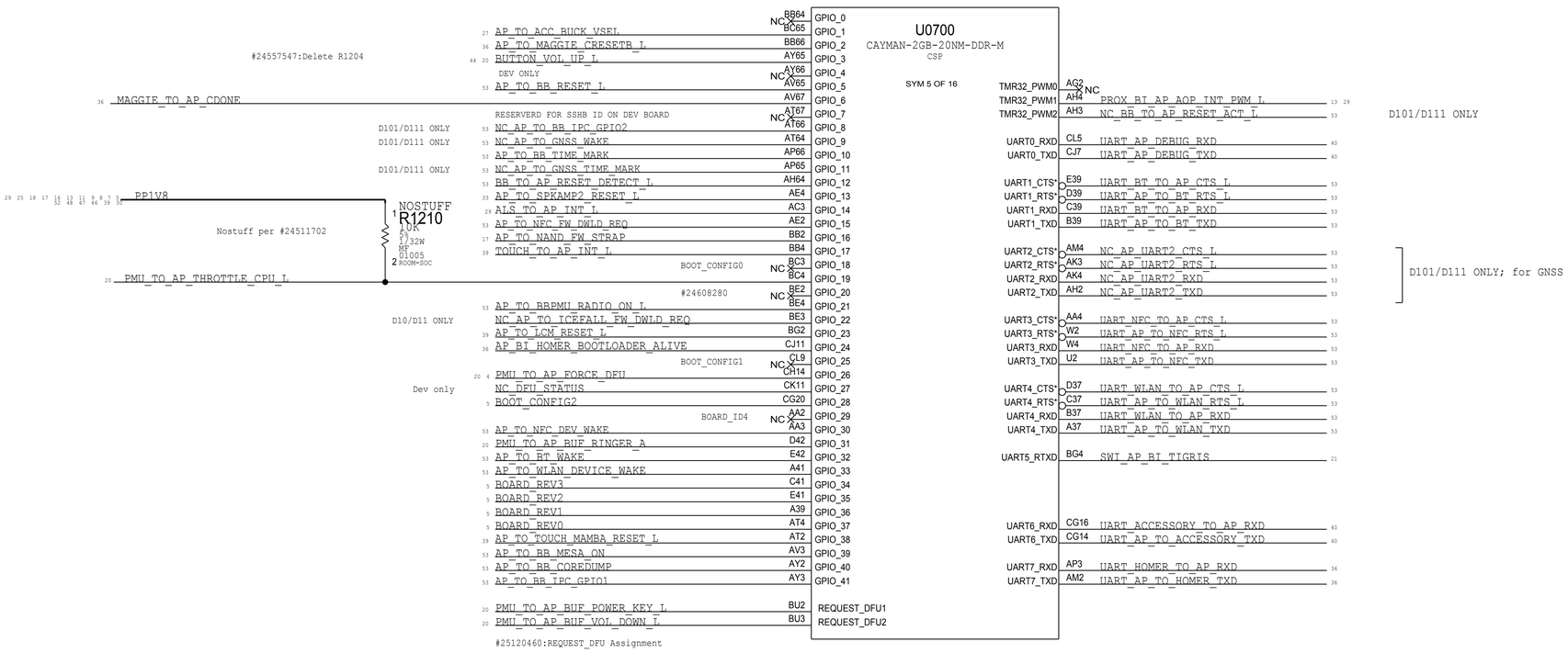

SOC - AOP

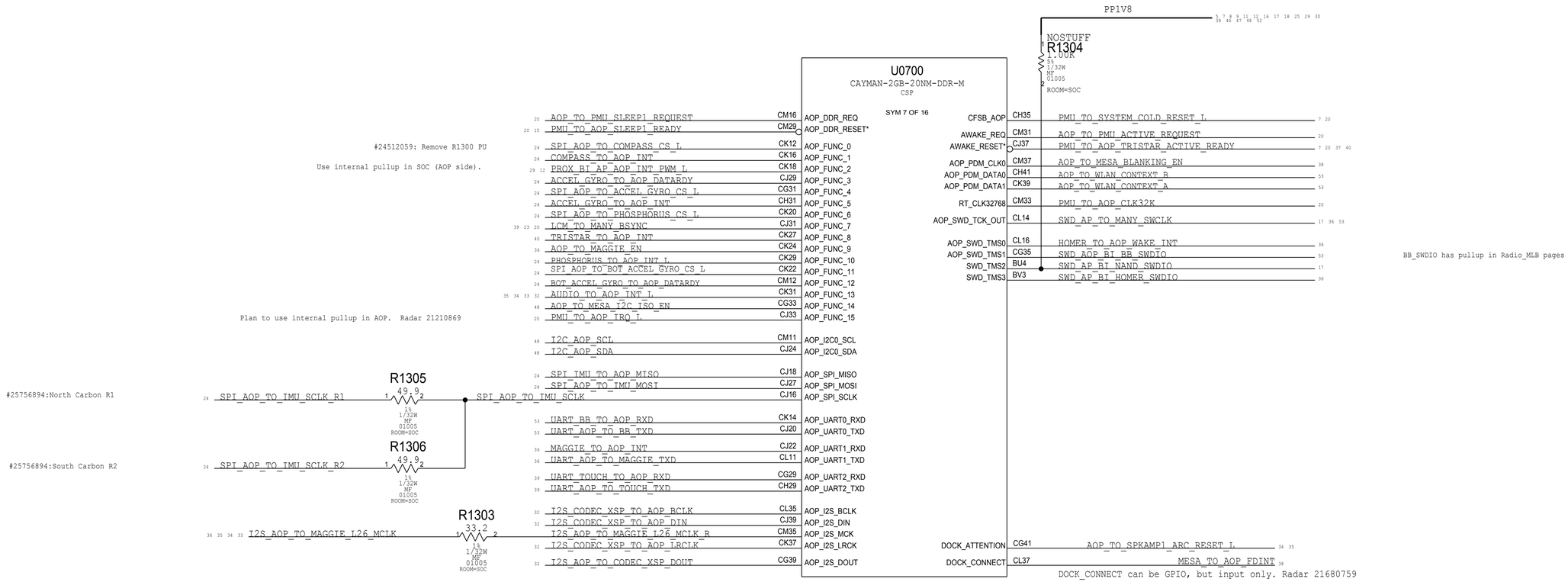
U0700
CAYMAN-2GB-20NM-DDR-M
CSP
SYM 7 OF 16
PP1V8
NOSTUFF
R1304
1.00K
5%
1/32W
MF
01005
ROOM=SOC
AOP_TO_PMU_SLEEP1_REQUEST CM16 AOP_DDR_REQ
PMU_TO_AOP_SLEEP1_READY CM29 AOP_DDR_RESET*
#24512059: Remove R1300 PU
SPI_AOP_TO_COMPASS_CS_L CK12 AOP_FUNC_0
COMPASS_TO_AOP_INT CK16 AOP_FUNC_1
Use internal pullup in SOC (AOP side).
PROX_BI_AP_AOP_INT_PWM_L CK18 AOP_FUNC_2
ACCEL_GYRO_TO_AOP_DATARDY CJ29 AOP_FUNC_3
SPI_AOP_TO_ACCEL_GYRO_CS_L CG31 AOP_FUNC_4
ACCEL_GYRO_TO_AOP_INT CH31 AOP_FUNC_5
SPI_AOP_TO_PHOSPHORUS_CS_L CK20 AOP_FUNC_6
LCM_TO_MANY_BSYNC CJ31 AOP_FUNC_7
TRISTAR_TO_AOP_INT CK27 AOP_FUNC_8
AOP_TO_MAGGIE_EN CK24 AOP_FUNC_9
PHOSPHORUS_TO_AOP_INT_L CK29 AOP_FUNC_10
SPI_AOP_TO_BOT_ACCEL_GYRO_CS_L CK22 AOP_FUNC_11
BOT_ACCEL_GYRO_TO_AOP_DATARDY CM12 AOP_FUNC_12
AUDIO_TO_AOP_INT_L CK31 AOP_FUNC_13
AOP_TO_MESA_I2C_ISO_EN CG33 AOP_FUNC_14
Plan to use internal pullup in AOP. Radar 21210869
PMU_TO_AOP_IRQ_L CJ33 AOP_FUNC_15
I2C_AOP_SCL CM11 AOP_I2C0_SCL
I2C_AOP_SDA CJ24 AOP_I2C0_SDA
R1305
#25756894:North Carbon R1
SPI_AOP_TO_IMU_SCLK_R1
49.9
1%
1/32W
MF
01005
ROOM=SOC
SPI_AOP_TO_IMU_SCLK
SPI_IMU_TO_AOP_MISO CJ18 AOP_SPI_MISO
SPI_AOP_TO_IMU_MOSI CJ27 AOP_SPI_MOSI
CJ16 AOP_SPI_SCLK
R1306
#25756894:South Carbon R2
SPI_AOP_TO_IMU_SCLK_R2
49.9
1%
1/32W
MF
01005
ROOM=SOC
UART_BB_TO_AOP_RXD CK14 AOP_UART0_RXD
UART_AOP_TO_BB_TXD CJ20 AOP_UART0_TXD
MAGGIE_TO_AOP_INT CJ22 AOP_UART1_RXD
UART_AOP_TO_MAGGIE_TXD CL11 AOP_UART1_TXD
UART_TOUCH_TO_AOP_RXD CG29 AOP_UART2_RXD
UART_AOP_TO_TOUCH_TXD CH29 AOP_UART2_TXD
R1303
33.2
1%
1/32W
MF
01005
ROOM=SOC
I2S_AOP_TO_MAGGIE_L26_MCLK
I2S_CODEC_XSP_TO_AOP_BCLK CL35 AOP_I2S_BCLK
I2S_CODEC_XSP_TO_AOP_DIN CJ39 AOP_I2S_DIN
I2S_AOP_TO_MAGGIE_L26_MCLK_R CM35 AOP_I2S_MCK
I2S_CODEC_XSP_TO_AOP_LRCLK CK37 AOP_I2S_LRCK
I2S_AOP_TO_CODEC_XSP_DOUT CG39 AOP_I2S_DOUT
CFSB_AOP CH35 PMU_TO_SYSTEM_COLD_RESET_L
AWAKE_REQ CM31 AOP_TO_PMU_ACTIVE_REQUEST
AWAKE_RESET* CJ37 PMU_TO_AOP_TRISTAR_ACTIVE_READY
AOP_PDM_CLK0 CM37 AOP_TO_MESA_BLANKING_EN
AOP_PDM_DATA0 CH41 AOP_TO_WLAN_CONTEXT_B
AOP_PDM_DATA1 CK39 AOP_TO_WLAN_CONTEXT_A
RT_CLK32768 CM33 PMU_TO_AOP_CLK32K
AOP_SWD_TCK_OUT CL14 SWD_AP_TO_MANY_SWCLK
AOP_SWD_TMS0 CL16 HOMER_TO_AOP_WAKE_INT
AOP_SWD_TMS1 CG35 SWD_AOP_BI_BB_SWDIO
SWD_TMS2 BU4 SWD_AP_BI_NAND_SWDIO
SWD_TMS3 BV3 SWD_AP_BI_HOMER_SWDIO
BB_SWDIO has pullup in Radio_MLB pages
DOCK_ATTENTION CG41 AOP_TO_SPKAMP1_ARC_RESET_L
DOCK_CONNECT CL37 MESA_TO_AOP_FDINT
DOCK_CONNECT can be GPIO, but input only. Radar 21680759

SOC - CPU, GPU & SOC RAILS

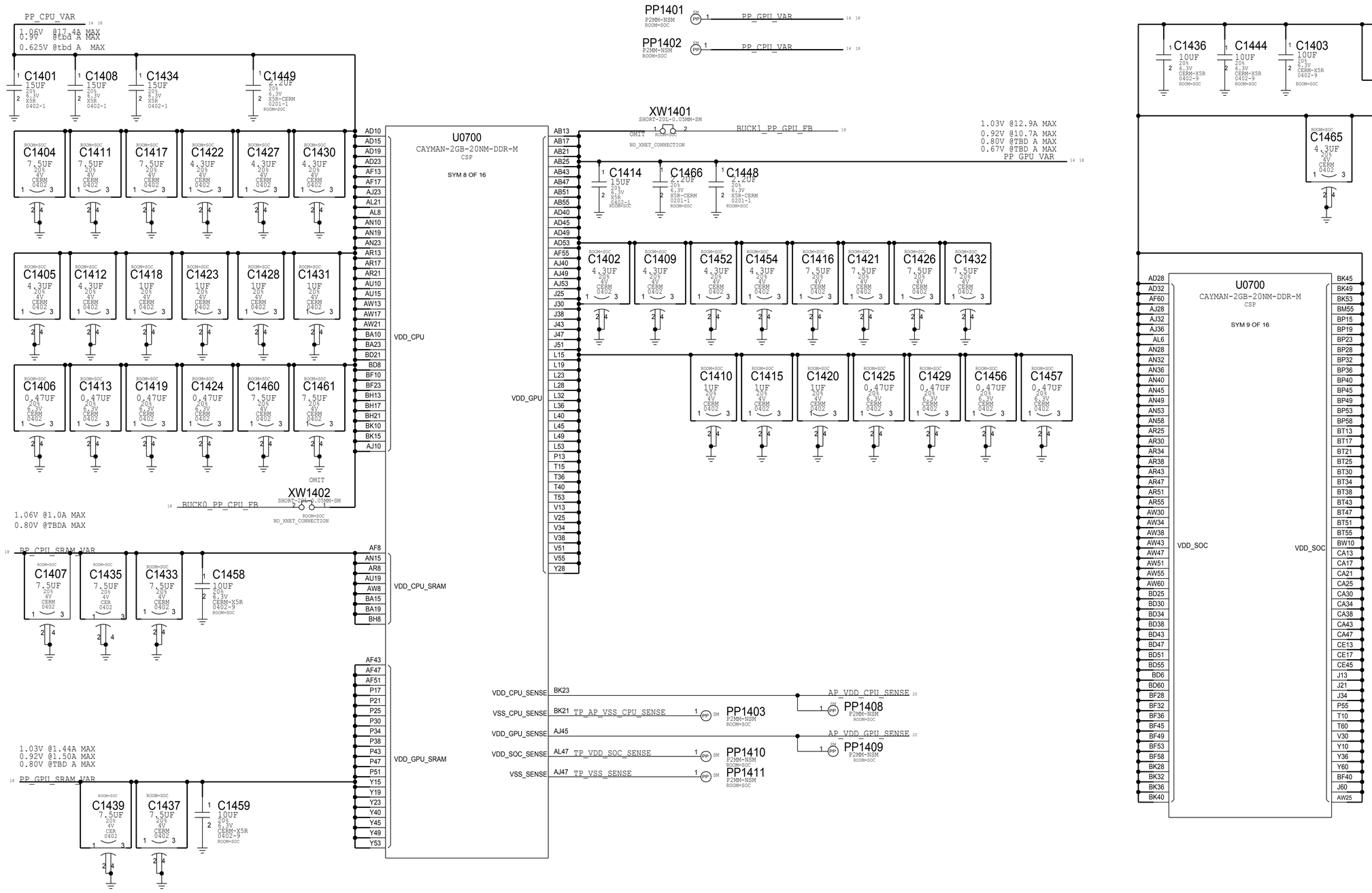

SOC - POWER SUPPLIES

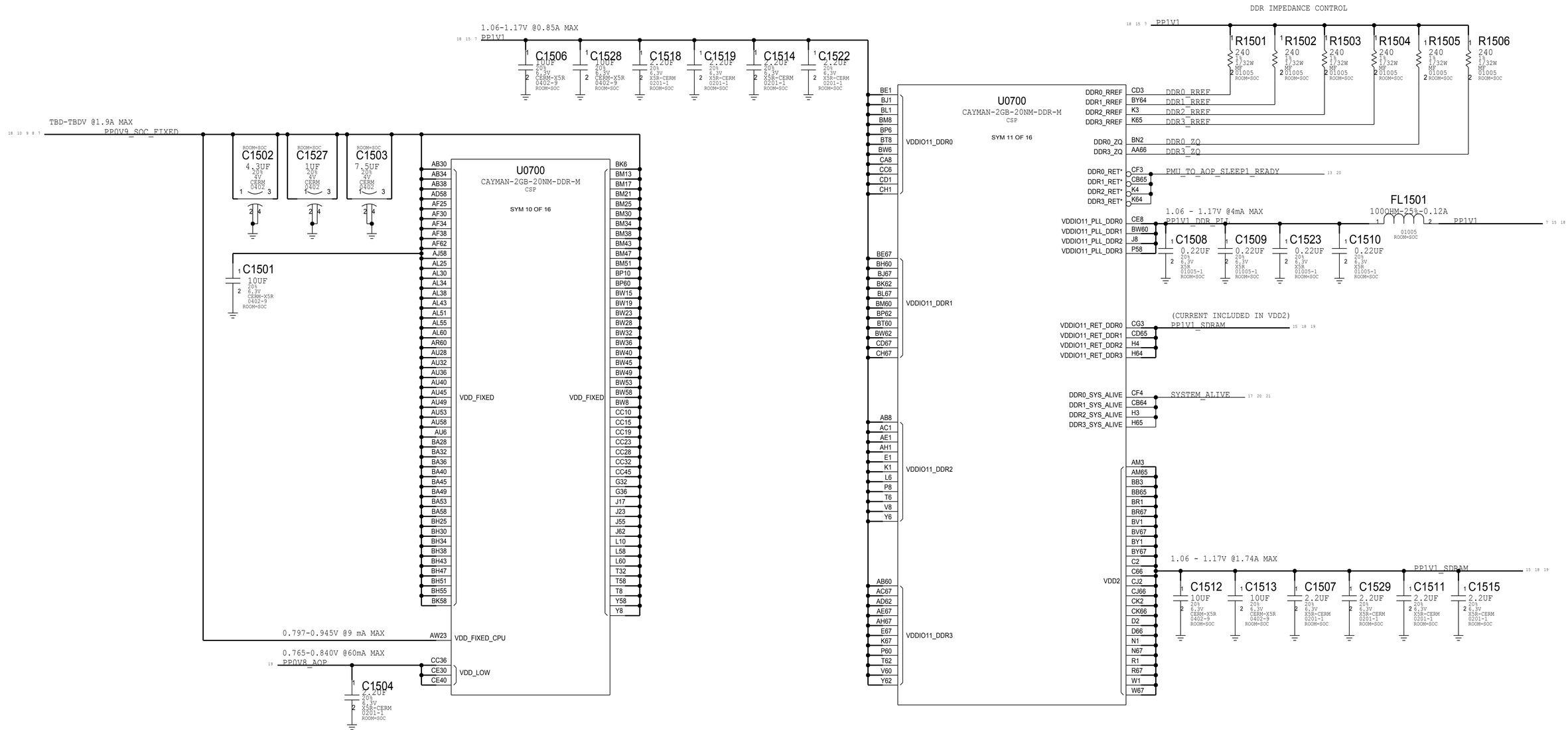

SOC - POWER SUPPLIES

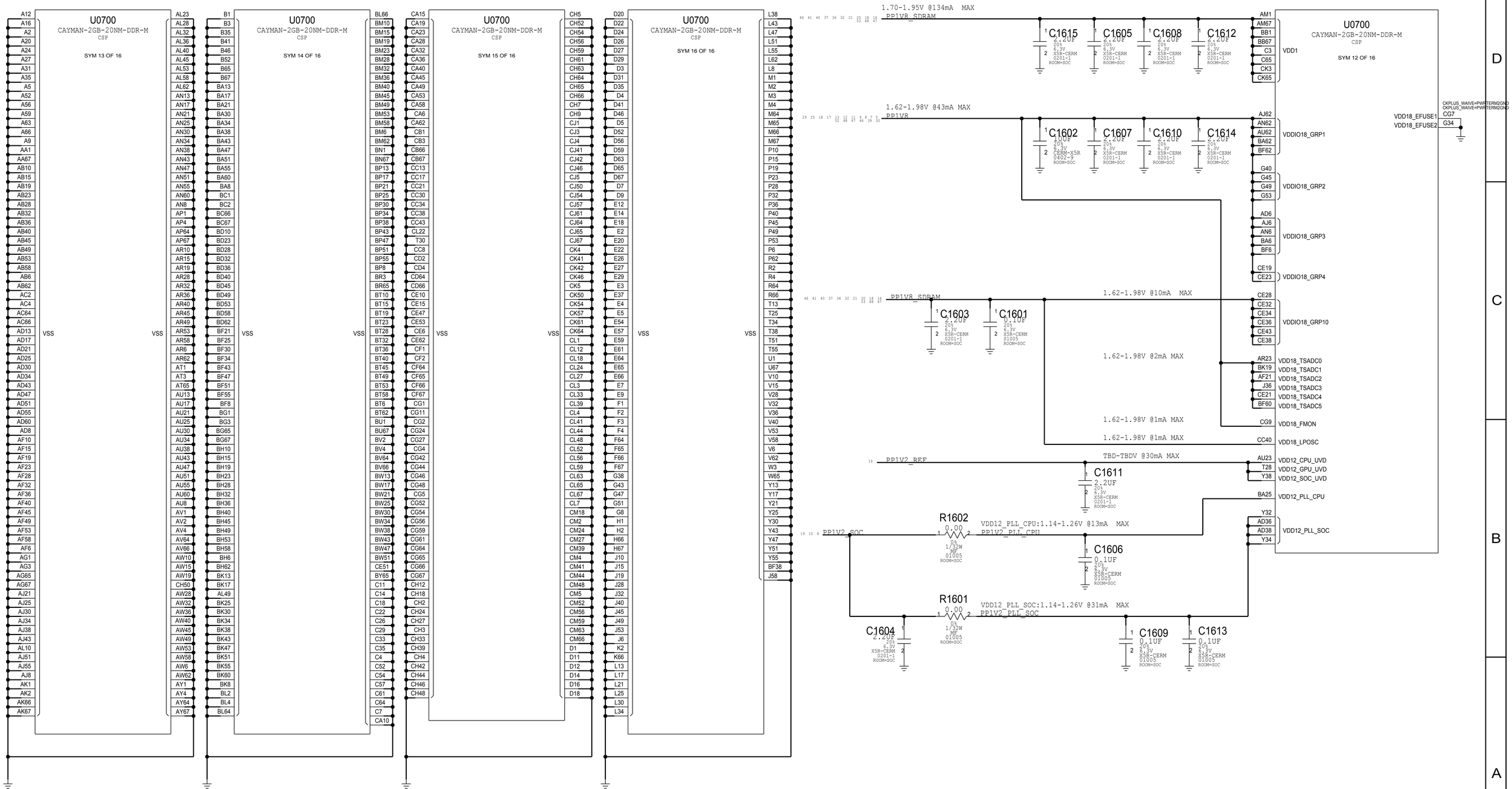

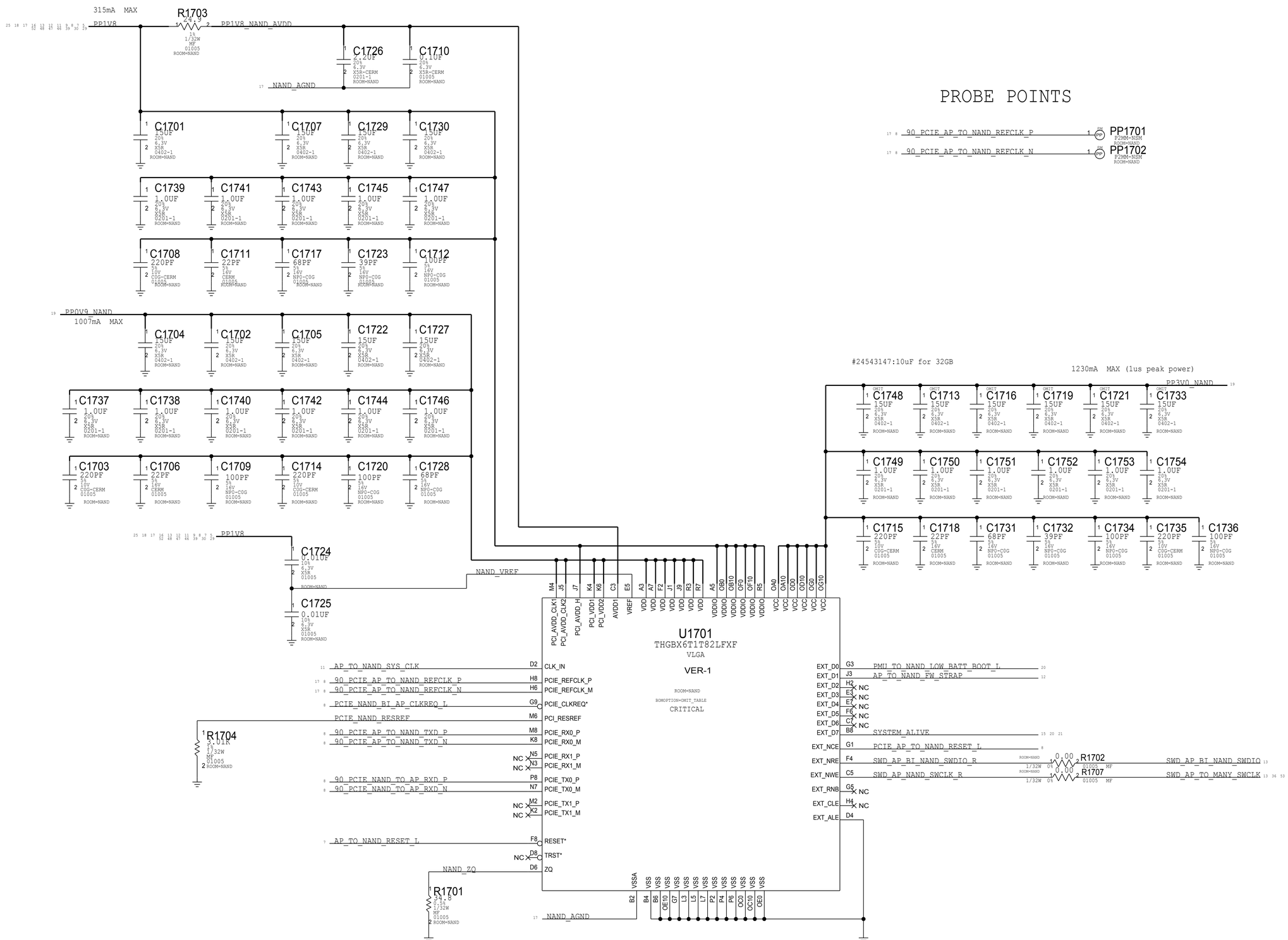
315mA MAX
PP1V8
R1703
24.9
1%
1/32W
MF
01005
ROOM=NAND
PP1V8_NAND_AVDD
C1726
2.2UF
20%
6.3V
X5R-CERM
0201-1
ROOM=NAND
C1710
9.4UF
20%
6.3V
X5R-CERM
01005
ROOM=NAND
NAND_AGND
C1701
15UF
20%
6.3V
X5R
0402-1
ROOM=NAND
C1707
C1729
C1730
C1739
1.0UF
20%
6.3V
X5R
0201-1
ROOM=NAND
C1741
C1743
C1745
C1747
C1708
220PF
5%
10V
C0G-CERM
01005
ROOM=NAND
C1711
22PF
5%
16V
CERM
01005
ROOM=NAND
C1717
68PF
5%
16V
NP0-C0G
01005
ROOM=NAND
C1723
39PF
5%
16V
NP0-C0G
01005
ROOM=NAND
C1712
100PF
5%
16V
NP0-C0G
01005
ROOM=NAND
PP0V9_NAND
1007mA MAX
C1704
C1702
C1705
C1722
C1727
C1737
C1738
C1740
C1742
C1744
C1746
C1703
220PF
5%
10V
C0G-CERM
01005
ROOM=NAND
C1706
22PF
5%
16V
CERM
01005
ROOM=NAND
C1709
100PF
5%
16V
NP0-C0G
01005
ROOM=NAND
C1714
220PF
5%
10V
C0G-CERM
01005
ROOM=NAND
C1720
100PF
5%
16V
NP0-C0G
01005
ROOM=NAND
C1728
68PF
5%
16V
NP0-C0G
01005
ROOM=NAND
PP1V8
C1724
0.01UF
10%
6.3V
X5R
01005
ROOM=NAND
C1725
0.01UF
10%
6.3V
X5R
01005
ROOM=NAND
NAND_VREF
PROBE POINTS
90_PCIE_AP_TO_NAND_REFCLK_P
PP1701
FZ2MM-NSM
ROOM=NAND
90_PCIE_AP_TO_NAND_REFCLK_N
PP1702
FZ2MM-NSM
ROOM=NAND
#24543147:10uF for 32GB
1230mA MAX (1us peak power)
PP3V0_NAND
C1748
C1713
C1716
C1719
C1721
C1733
C1749
C1750
C1751
C1752
C1753
C1754
C1715
220PF
5%
10V
C0G-CERM
01005
ROOM=NAND
C1718
22PF
5%
16V
CERM
01005
ROOM=NAND
C1731
68PF
5%
16V
NP0-C0G
01005
ROOM=NAND
C1732
39PF
5%
16V
NP0-C0G
01005
ROOM=NAND
C1734
100PF
5%
16V
NP0-C0G
01005
ROOM=NAND
C1735
220PF
5%
10V
C0G-CERM
01005
ROOM=NAND
C1736
100PF
5%
16V
NP0-C0G
01005
ROOM=NAND
U1701
THGBX6T1T82LFXF
VLGA
VER-1
ROOM=NAND
BOMOPTION=OMIT_TABLE
CRITICAL
PCI_AVDD_CLK1
PCI_AVDD_CLK2
PCI_AVDD_H
PCI_VDD1
PCI_VDD2
AVDD1
VREF
VDDIO
VCC
VDD
VSS
VSSA
AP_TO_NAND_SYS_CLK
CLK_IN
90_PCIE_AP_TO_NAND_REFCLK_P
PCIE_REFCLK_P
90_PCIE_AP_TO_NAND_REFCLK_N
PCIE_REFCLK_M
PCIE_NAND_BI_AP_CLKREQ_L
PCIE_CLKREQ*
PCIE_NAND_RESREF
PCI_RESREF
R1704
3.01K
1%
1/32W
MF
01005
ROOM=NAND
90_PCIE_AP_TO_NAND_TXD_P
PCIE_RX0_P
90_PCIE_AP_TO_NAND_TXD_N
PCIE_RX0_M
PCIE_RX1_P
PCIE_RX1_M
90_PCIE_NAND_TO_AP_RXD_P
PCIE_TX0_P
90_PCIE_NAND_TO_AP_RXD_N
PCIE_TX0_M
PCIE_TX1_P
PCIE_TX1_M
AP_TO_NAND_RESET_L
RESET*
TRST*
ZQ
NAND_ZQ
R1701
34.8
0.5%
1/32W
MF
01005
ROOM=NAND
NAND_AGND
EXT_D0
PMU_TO_NAND_LOW_BATT_BOOT_L
EXT_D1
AP_TO_NAND_FW_STRAP
EXT_D2
EXT_D3
EXT_D4
EXT_D5
EXT_D6
EXT_D7
SYSTEM_ALIVE
EXT_NCE
PCIE_AP_TO_NAND_RESET_L
EXT_NRE
SWD_AP_BI_NAND_SWDIO_R
EXT_NWE
SWD_AP_NAND_SWCLK_R
EXT_RNB
EXT_CLE
EXT_ALE
R1702
0.00
1/32W
01005
MF
R1707
0.00
1/32W
01005
MF
SWD_AP_BI_NAND_SWDIO
SWD_AP_TO_MANY_SWCLK

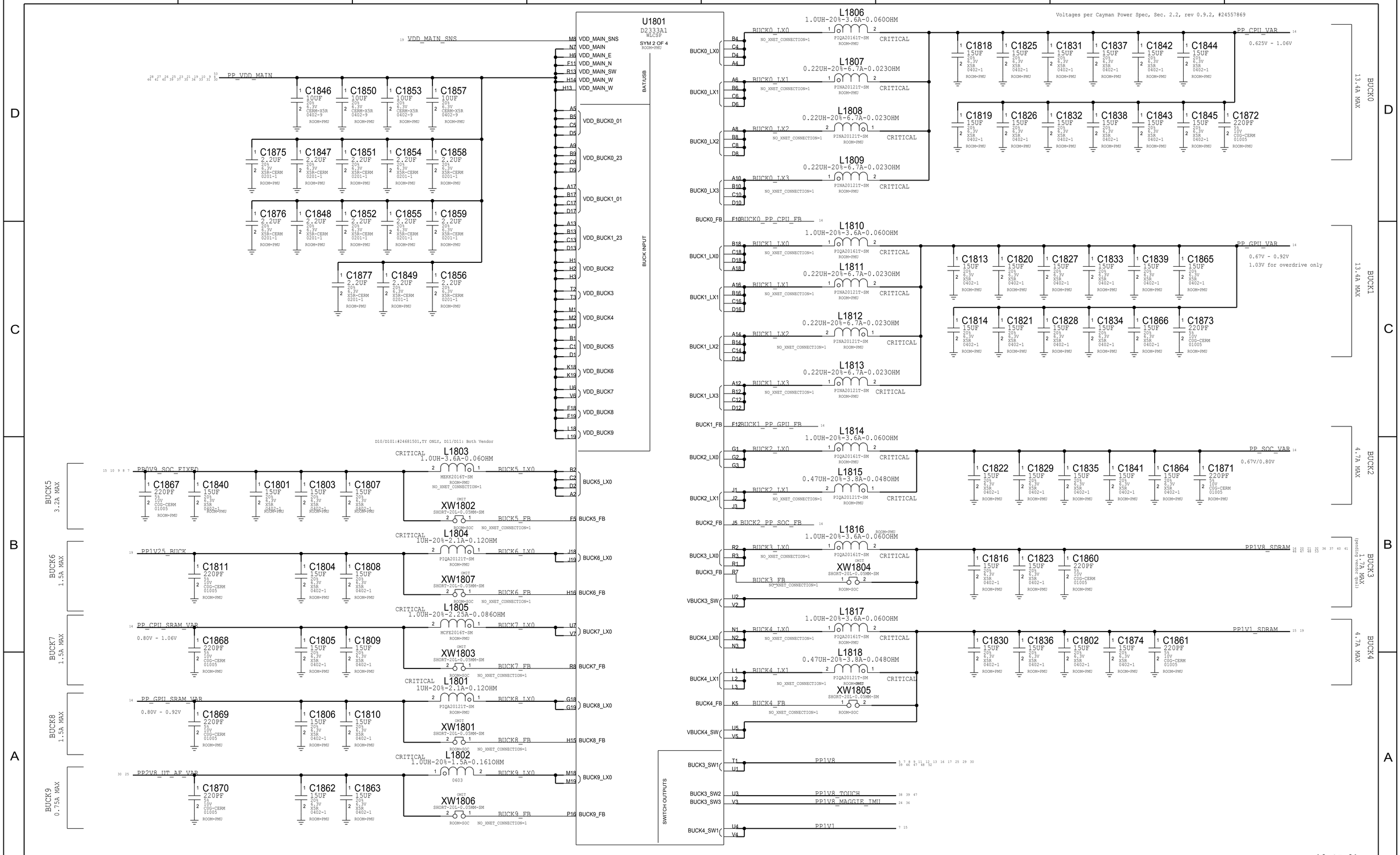
U1801
D2333A1
WLCSP
SYM 2 OF 4
ROOM=PMU
VDD_MAIN_SNS
VDD_MAIN
VDD_MAIN_E
VDD_MAIN_N
VDD_MAIN_SW
VDD_MAIN_W
VDD_MAIN
PP_VDD_MAIN
BAT/USB
BUCK INPUT
VDD_BUCK0_01
VDD_BUCK0_23
VDD_BUCK1_01
VDD_BUCK1_23
VDD_BUCK2
VDD_BUCK3
VDD_BUCK4
VDD_BUCK5
VDD_BUCK6
VDD_BUCK7
VDD_BUCK8
VDD_BUCK9
Voltages per Cayman Power Spec, Sec. 2.2, rev 0.9.2, #24557869
BUCK0
13.4A MAX
PP_CPU_VAR
0.625V - 1.06V
L1806
1.0UH-20%-3.6A-0.060OHM
L1807
0.22UH-20%-6.7A-0.023OHM
L1808
0.22UH-20%-6.7A-0.023OHM
L1809
0.22UH-20%-6.7A-0.023OHM
BUCK0_PP_CPU_FB
BUCK1
13.4A MAX
PP_GPU_VAR
0.67V - 0.92V
1.03V for overdrive only
L1810
1.0UH-20%-3.6A-0.060OHM
L1811
0.22UH-20%-6.7A-0.023OHM
L1812
0.22UH-20%-6.7A-0.023OHM
L1813
0.22UH-20%-6.7A-0.023OHM
BUCK1_PP_GPU_FB
BUCK2
4.7A MAX
PP_SOC_VAR
0.67V/0.80V
L1814
1.0UH-20%-3.6A-0.060OHM
L1815
0.47UH-20%-3.6A-0.048OHM
BUCK2_PP_SOC_FB
BUCK3
1.7A MAX
(pending vendor qual)
PP1V8_SDRAM
L1816
1.0UH-20%-3.6A-0.060OHM
XW1804
BUCK4
4.7A MAX
PP1V1_SDRAM
L1817
1.0UH-20%-3.6A-0.060OHM
L1818
0.47UH-20%-3.8A-0.048OHM
XW1805
BUCK5
3.2A MAX
PP0V9_SOC_FIXED
L1803
1.0UH-3.6A-0.060HM
XW1802
BUCK6
1.5A MAX
PP1V25_BUCK
L1804
1UH-20%-2.1A-0.120HM
XW1807
BUCK7
1.5A MAX
PP_CPU_SRAM_VAR
0.80V - 1.06V
L1805
1.0UH-20%-2.25A-0.086OHM
XW1803
BUCK8
1.5A MAX
PP_GPU_SRAM_VAR
0.80V - 0.92V
L1801
1UH-20%-2.1A-0.120HM
XW1801
BUCK9
0.75A MAX
PP2V8_UT_AF_VAR
L1802
1.0UH-20%-1.5A-0.161OHM
XW1806
D10/D101:#24681501,TY ONLY, D11/D11: Both Vendor
SWITCH OUTPUTS
PP1V8
PP1V8_TOUCH
PP1V8_MAGGIE_IMU
PP1V1

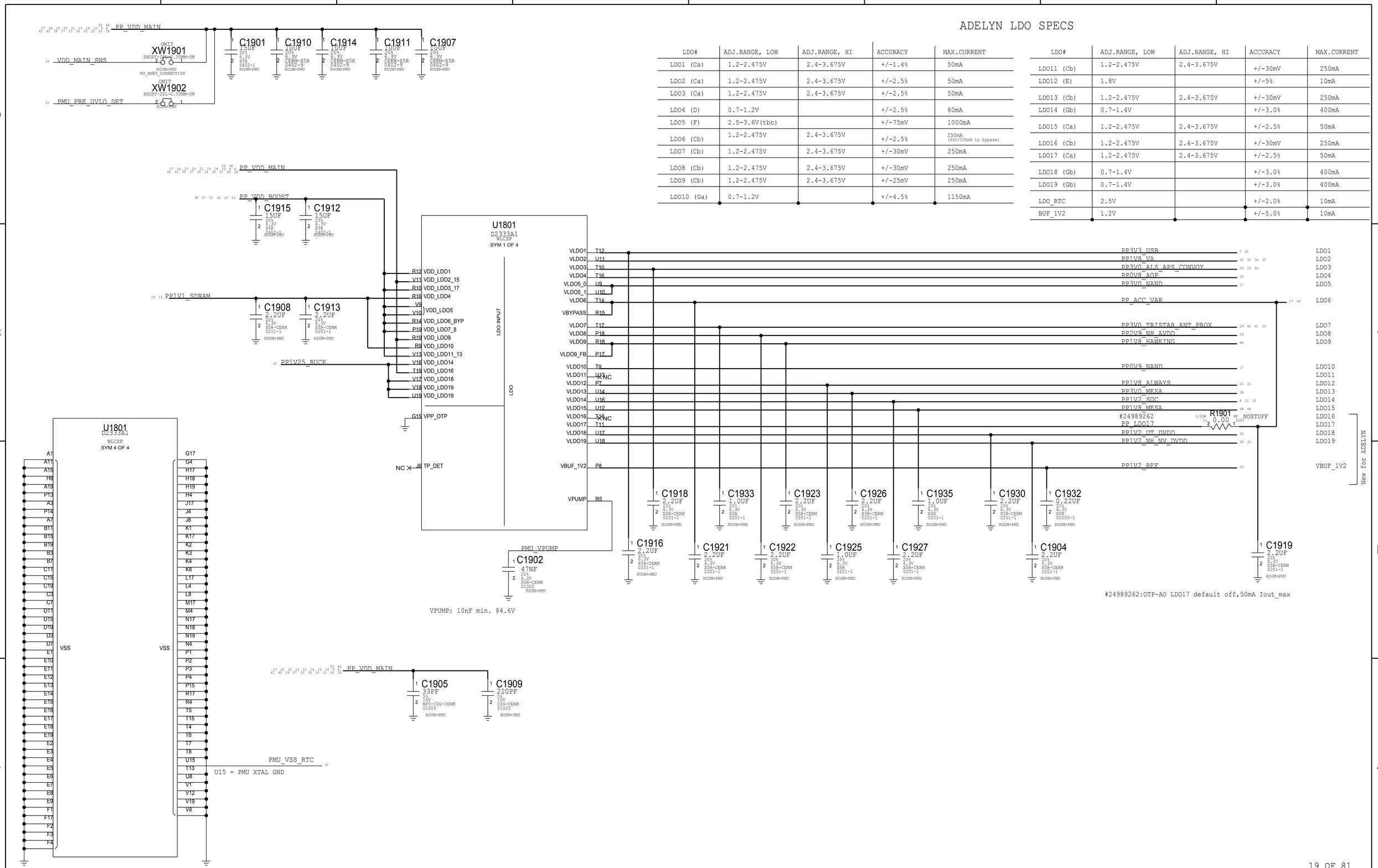

ADELYN LDO SPECS

LDO#	ADJ.RANGE, LOW	ADJ.RANGE, HI	ACCURACY	MAX.CURRENT
LDO1 (Ca)	1.2-2.475V	2.4-3.675V	+/-1.4%	50mA
LDO2 (Ca)	1.2-2.475V	2.4-3.675V	+/-2.5%	50mA
LDO3 (Ca)	1.2-2.475V	2.4-3.675V	+/-2.5%	50mA
LDO4 (D)	0.7-1.2V		+/-2.5%	60mA
LDO5 (F)	2.5-3.6V(tbc)		+/-75mV	1000mA
LDO6 (Cb)	1.2-2.475V	2.4-3.675V	+/-2.5%	250mA (500/100mA in bypass)
LDO7 (Cb)	1.2-2.475V	2.4-3.675V	+/-30mV	250mA
LDO8 (Cb)	1.2-2.475V	2.4-3.675V	+/-30mV	250mA
LDO9 (Cb)	1.2-2.475V	2.4-3.675V	+/-25mV	250mA
LDO10 (Ga)	0.7-1.2V		+/-4.5%	1150mA

LDO#	ADJ.RANGE, LOW	ADJ.RANGE, HI	ACCURACY	MAX.CURRENT
LDO11 (Cb)	1.2-2.475V	2.4-3.675V	+/-30mV	250mA
LDO12 (E)	1.8V		+/-5%	10mA
LDO13 (Cb)	1.2-2.475V	2.4-3.675V	+/-30mV	250mA
LDO14 (Gb)	0.7-1.4V		+/-3.0%	400mA
LDO15 (Ca)	1.2-2.475V	2.4-3.675V	+/-2.5%	50mA
LDO16 (Cb)	1.2-2.475V	2.4-3.675V	+/-30mV	250mA
LDO17 (Ca)	1.2-2.475V	2.4-3.675V	+/-2.5%	50mA
LDO18 (Gb)	0.7-1.4V		+/-3.0%	400mA
LDO19 (Gb)	0.7-1.4V		+/-3.0%	400mA
LDO_RTC	2.5V		+/-2.0%	10mA
BUF_1V2	1.2V		+/-5.0%	10mA

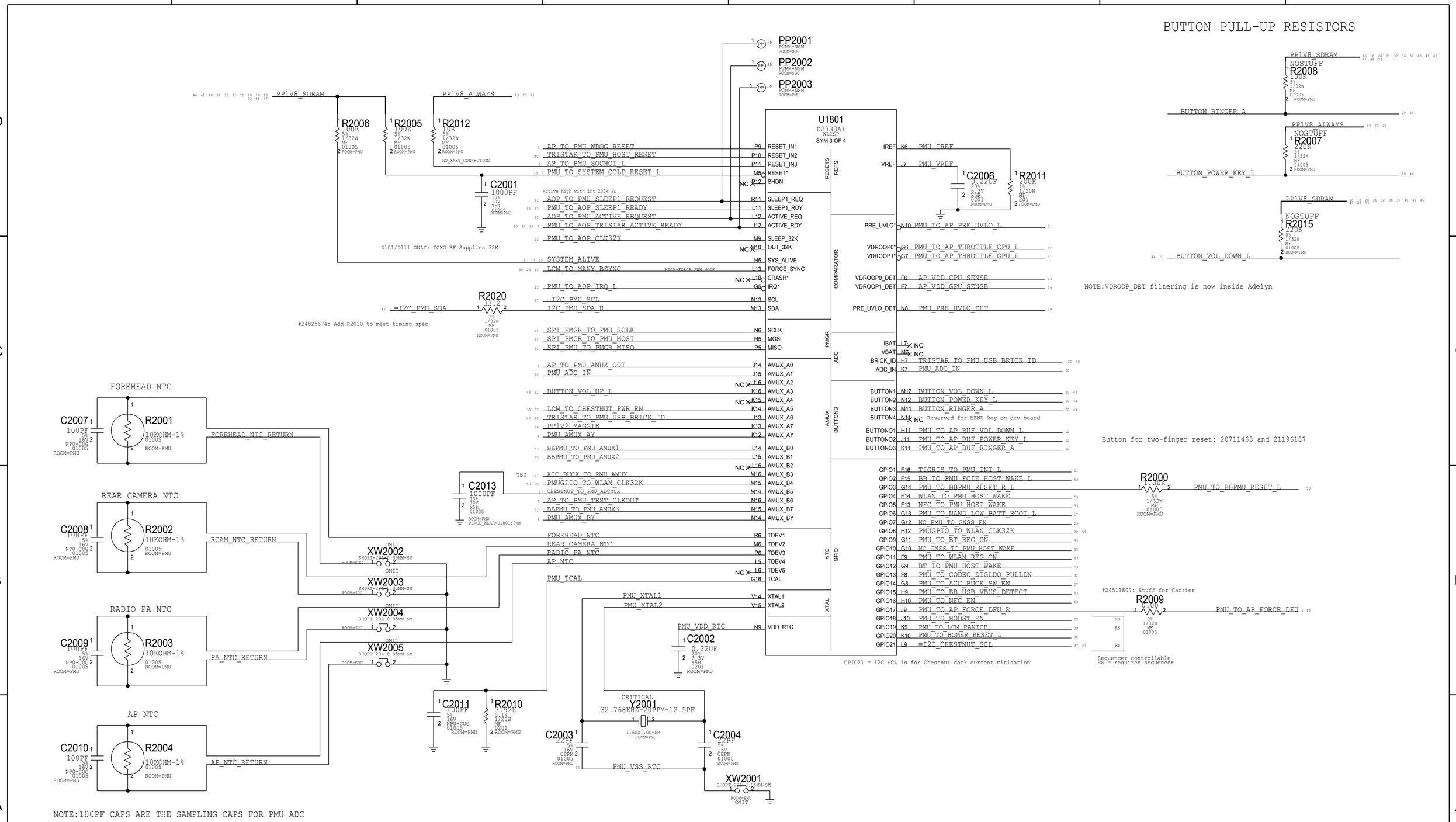
BUTTON PULL-UP RESISTORS
PP1V8_SDRAM
PP1V8_ALWAYS
R2006 100K 5% 1/32W MF 01005 ROOM=PMU
R2005 100K 5% 1/32W MF 01005 ROOM=PMU
R2012 10K 5% 1/32W MF 01005 ROOM=PMU
NO_XNET_CONNECTION
C2001 1000PF 10% 10V X5R 01005 ROOM=PMU
D101/D111 ONLY: TCXO_RF Supplies 32K
R2020 33.2 1% 1/32W MF 01005 ROOM=PMU
#24825674: Add R2020 to meet timing spec
PP2001 P2MM-NSM ROOM=SOC
PP2002 P2MM-NSM ROOM=SOC
PP2003 P2MM-NSM ROOM=PMU
U1801
D2333A1
WLCSP
SYM 3 OF 4
AP_TO_PMU_WDOG_RESET
TRISTAR_TO_PMU_HOST_RESET
AP_TO_PMU_SOCHOT_L
PMU_TO_SYSTEM_COLD_RESET_L
Active high with int 200k PD
AOP_TO_PMU_SLEEP1_REQUEST
PMU_TO_AOP_SLEEP1_READY
AOP_TO_PMU_ACTIVE_REQUEST
PMU_TO_AOP_TRISTAR_ACTIVE_READY
PMU_TO_AOP_CLK32K
SYSTEM_ALIVE
LCM_TO_MANY_BSYNC
HIGH=FORCE_PWM_MODE
PMU_TO_AOP_IRQ_L
=I2C_PMU_SCL
=I2C_PMU_SDA
I2C_PMU_SDA_R
SPI_PMGR_TO_PMU_SCLK
SPI_PMGR_TO_PMU_MOSI
SPI_PMU_TO_PMGR_MISO
AP_TO_PMU_AMUX_OUT
PMU_ADC_IN
BUTTON_VOL_UP_L
LCM_TO_CHESTNUT_PWR_EN
TRISTAR_TO_PMU_USB_BRICK_ID
PP1V2_MAGGIE
PMU_AMUX_AY
BBPMU_TO_PMU_AMUX1
BBPMU_TO_PMU_AMUX2
ACC_BUCK_TO_PMU_AMUX
PMUGPIO_TO_WLAN_CLK32K
CHESTNUT_TO_PMU_ADCMUX
AP_TO_PMU_TEST_CLKOUT
BBPMU_TO_PMU_AMUX3
PMU_AMUX_BY
FOREHEAD_NTC
REAR_CAMERA_NTC
RADIO_PA_NTC
AP_NTC
PMU_TCAL
PMU_XTAL1
PMU_XTAL2
PMU_VDD_RTC
PMU_VSS_RTC
RESET_IN1
RESET_IN2
RESET_IN3
RESET*
SHDN
SLEEP1_REQ
SLEEP1_RDY
ACTIVE_REQ
ACTIVE_RDY
SLEEP_32K
OUT_32K
SYS_ALIVE
FORCE_SYNC
CRASH*
IRQ*
SCL
SDA
SCLK
MOSI
MISO
AMUX_A0
AMUX_A1
AMUX_A2
AMUX_A3
AMUX_A4
AMUX_A5
AMUX_A6
AMUX_A7
AMUX_AY
AMUX_B0
AMUX_B1
AMUX_B2
AMUX_B3
AMUX_B4
AMUX_B5
AMUX_B6
AMUX_B7
AMUX_BY
TDEV1
TDEV2
TDEV3
TDEV4
TDEV5
TCAL
XTAL1
XTAL2
VDD_RTC
RESETS
REFS
COMPARATOR
PMGR
ADC
AMUX
BUTTONS
NTC
GPIO
XTAL
IREF
VREF
PRE_UVLO*
VDROOP0*
VDROOP1*
VDROOP0_DET
VDROOP1_DET
PRE_UVLO_DET
IBAT
VBAT
BRICK_ID
ADC_IN
BUTTON1
BUTTON2
BUTTON3
BUTTON4
BUTTONO1
BUTTONO2
BUTTONO3
GPIO1
GPIO2
GPIO3
GPIO4
GPIO5
GPIO6
GPIO7
GPIO8
GPIO9
GPIO10
GPIO11
GPIO12
GPIO13
GPIO14
GPIO15
GPIO16
GPIO17
GPIO18
GPIO19
GPIO20
GPIO21
PMU_IREF
PMU_VREF
PMU_TO_AP_PRE_UVLO_L
PMU_TO_AP_THROTTLE_CPU_L
PMU_TO_AP_THROTTLE_GPU_L
AP_VDD_CPU_SENSE
AP_VDD_GPU_SENSE
PMU_PRE_UVLO_DET
TRISTAR_TO_PMU_USB_BRICK_ID
PMU_ADC_IN
BUTTON_VOL_DOWN_L
BUTTON_POWER_KEY_L
BUTTON_RINGER_A
Reserved for MENU key on dev board
PMU_TO_AP_BUF_VOL_DOWN_L
PMU_TO_AP_BUF_POWER_KEY_L
PMU_TO_AP_BUF_RINGER_A
TIGRIS_TO_PMU_INT_L
BB_TO_PMU_PCIE_HOST_WAKE_L
PMU_TO_BBPMU_RESET_R_L
WLAN_TO_PMU_HOST_WAKE
NFC_TO_PMU_HOST_WAKE
PMU_TO_NAND_LOW_BATT_BOOT_L
NC_PMU_TO_GNSS_EN
PMUGPIO_TO_WLAN_CLK32K
PMU_TO_BT_REG_ON
NC_GNSS_TO_PMU_HOST_WAKE
PMU_TO_WLAN_REG_ON
BT_TO_PMU_HOST_WAKE
PMU_TO_CODEC_DIGLDO_PULLDN
PMU_TO_ACC_BUCK_SW_EN
PMU_TO_BB_USB_VBUS_DETECT
PMU_TO_NFC_EN
PMU_TO_AP_FORCE_DFU_R
PMU_TO_BOOST_EN
PMU_TO_LCM_PANICB
PMU_TO_HOMER_RESET_L
=I2C_CHESTNUT_SCL
GPIO21 = I2C SCL is for Chestnut dark current mitigation
C2006 0.22UF 20% 6.3V X5R 0201 ROOM=PMU
R2011 200K 1% 1/20W MF 201 ROOM=PMU
PP1V8_SDRAM
NOSTUFF R2008 100K 5% 1/32W MF 01005 ROOM=PMU
PP1V8_ALWAYS
NOSTUFF R2007 220K 5% 1/32W MF 01005 ROOM=PMU
PP1V8_SDRAM
NOSTUFF R2015 220K 5% 1/32W MF 01005 ROOM=PMU
NOTE:VDROOP_DET filtering is now inside Adelyn
Button for two-finger reset: 20711463 and 21196187
R2000 1.00K 5% 1/32W MF 01005 ROOM=PMU
#24511807: Stuff for Carrier
R2009 0.00 5% 1/32W MF 01005
Sequencer controllable
RS = requires sequencer
FOREHEAD NTC
C2007 100PF 5% 16V NP0-C0G 01005 ROOM=PMU
R2001 10KOHM-1% 01005 ROOM=PMU
FOREHEAD_NTC_RETURN
REAR CAMERA NTC
C2008 100PF 5% 16V NP0-C0G 01005 ROOM=PMU
R2002 10KOHM-1% 01005 ROOM=PMU
RCAM_NTC_RETURN
RADIO PA NTC
C2009 100PF 5% 16V NP0-C0G 01005 ROOM=PMU
R2003 10KOHM-1% 01005 ROOM=PMU
PA_NTC_RETURN
AP NTC
C2010 100PF 5% 16V NP0-C0G 01005 ROOM=PMU
R2004 10KOHM-1% 01005 ROOM=PMU
AP_NTC_RETURN
XW2002 OMIT SHORT-2PAD-0.05MM-SM ROOM=SOC
XW2003 OMIT SHORT-2PAD-0.05MM-SM ROOM=SOC
XW2004 OMIT SHORT-20L-0.05MM-SM ROOM=SOC
XW2005 OMIT SHORT-20L-0.05MM-SM ROOM=SOC
C2013 1000PF 10% 10V X5R 01005 ROOM=PMU PLACE_NEAR=U1801:2mm
C2011 100PF 5% 16V NP0-C0G 01005 ROOM=PMU
R2010 9.32K 0.1% 1/20W MF 0201 ROOM=PMU
C2002 0.22UF 20% 6.3V X5R 0201 ROOM=PMU
CRITICAL
Y2001 32.768KHZ-20PPM-12.5PF 1.60X1.00-SM ROOM=PMU
C2003 22PF 5% 16V CERM 01005 ROOM=PMU
C2004 22PF 5% 16V CERM 01005 ROOM=PMU
XW2001 SHORT-2PAD-0.05MM-SM ROOM=PMU OMIT
NOTE:100PF CAPS ARE THE SAMPLING CAPS FOR PMU ADC

TIGRIS CHARGER

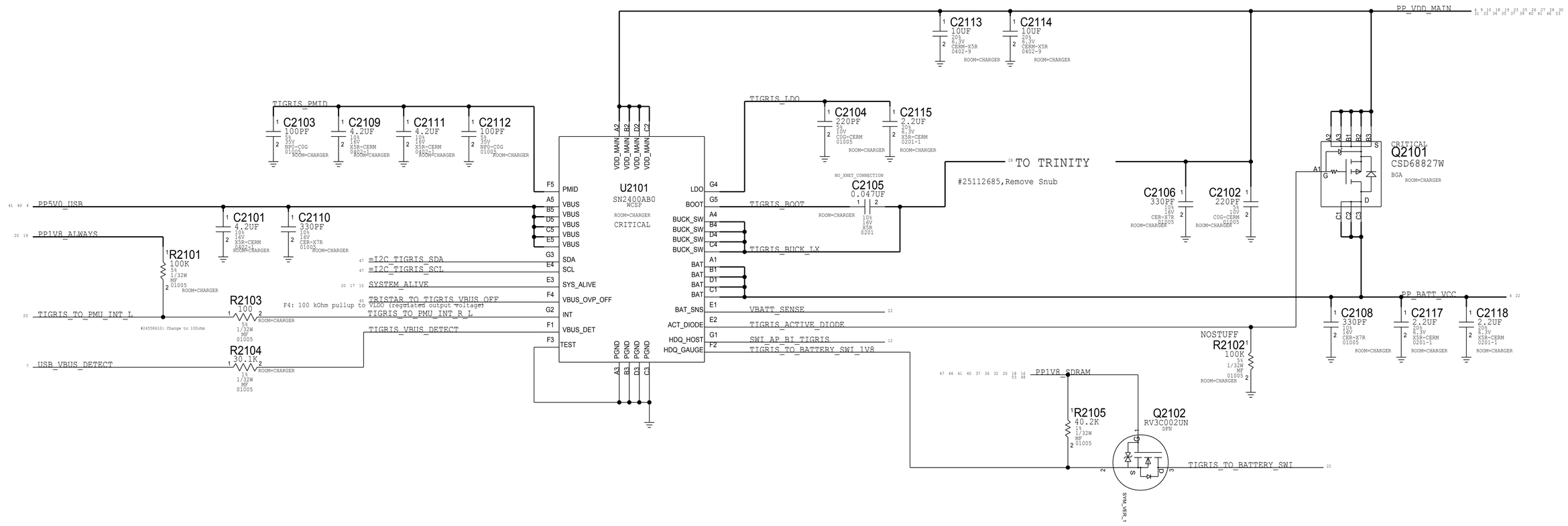

BATTERY CONNECTOR

THIS ONE ON MLB ---> 516S00172 (matches d10 mlb MCO rev 27)

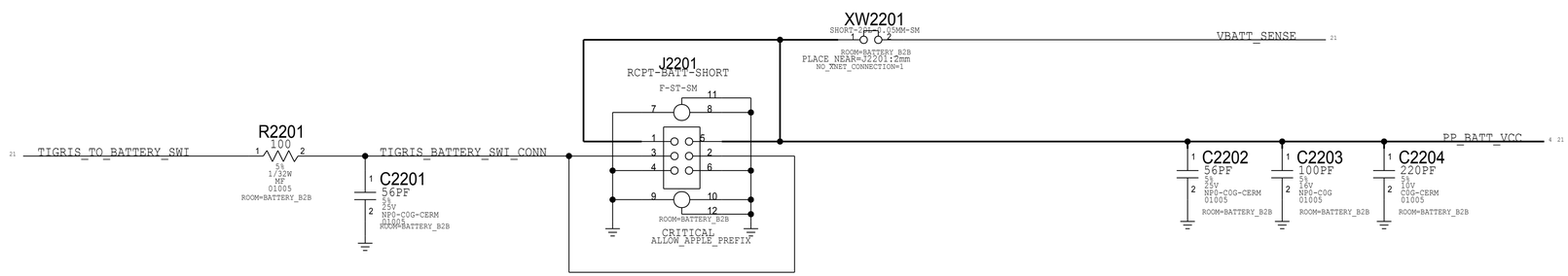

BOOST

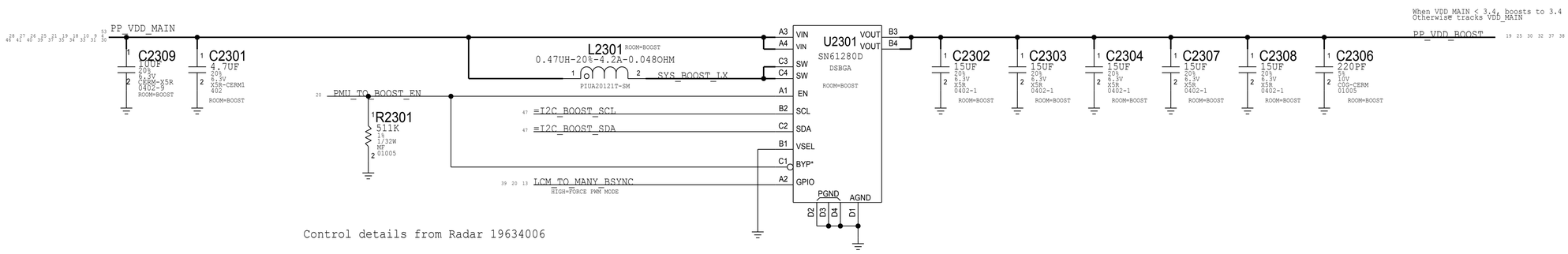

Control details from Radar 19634006

CARBON - ACCEL & GYRO

INVENSENSE, MPU-6800: C2403=0.1UF

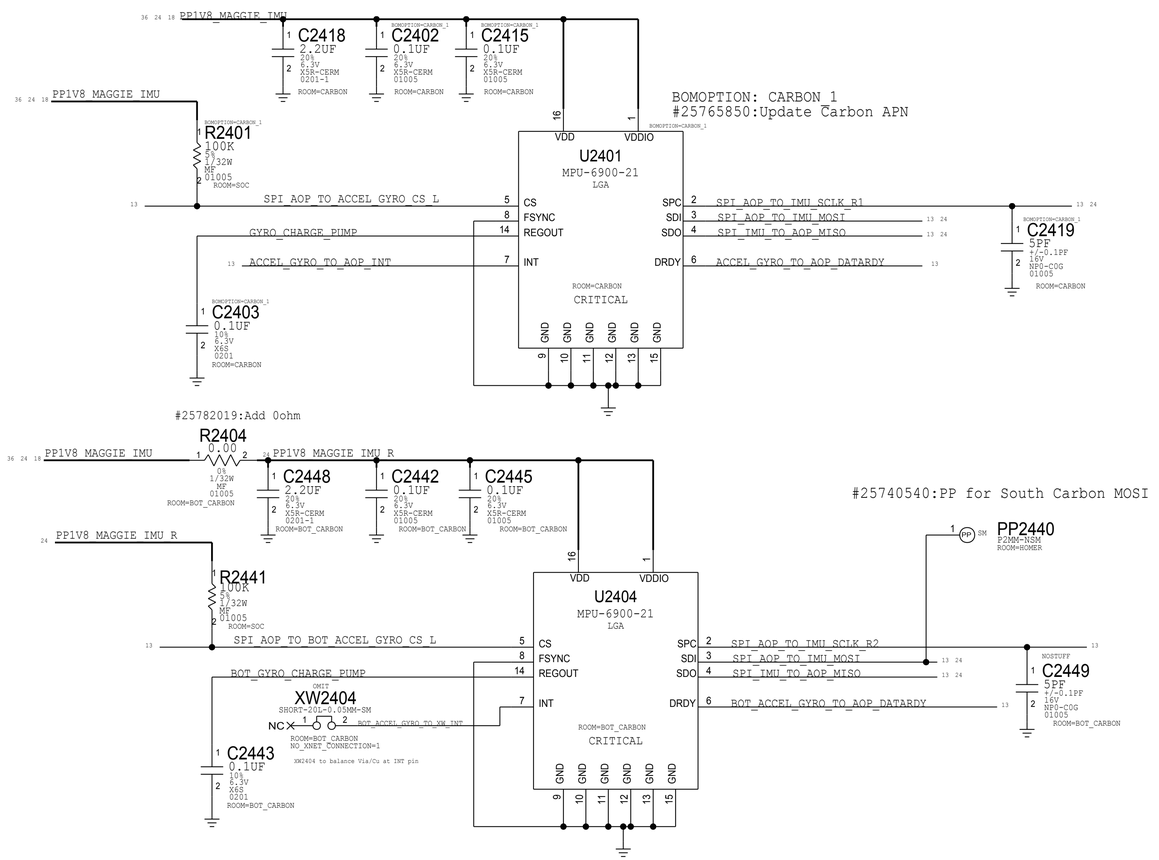

BOMOPTION: CARBON_1
#25765850:Update Carbon APN

#25782019:Add 0ohm

#25740540:PP for South Carbon MOSI

PP2440 P2MM-NSM ROOM=HOMER

MAGNESIUM - COMPASS

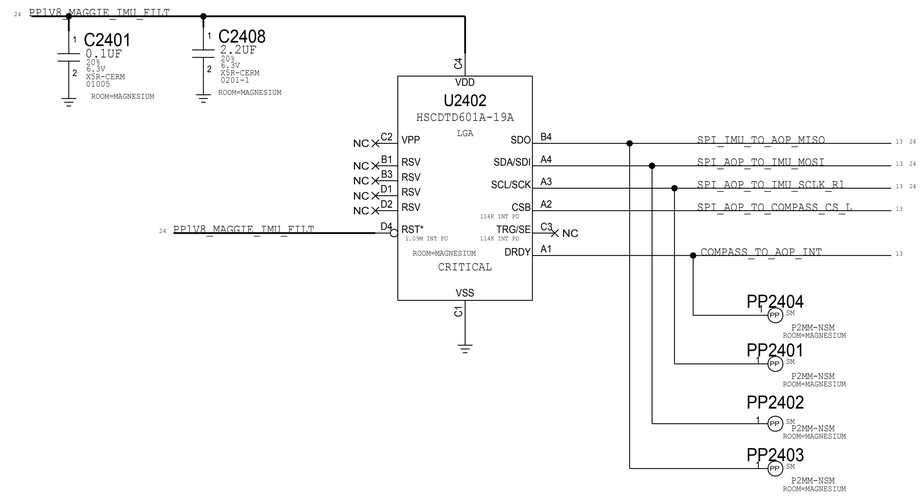

PHOSPHORUS

#24593845

BOSCH (APN:338S00188): nostuff C2420/C2421/C2422/C2423 and R2403 PU
ST (APN:338S00230): stuff C2420-C2423, C2420R2422 with 155S00017, stuff R2403 PU
C2420=4pF(131S0253),C2405=3pF(131S0251) per #25691124

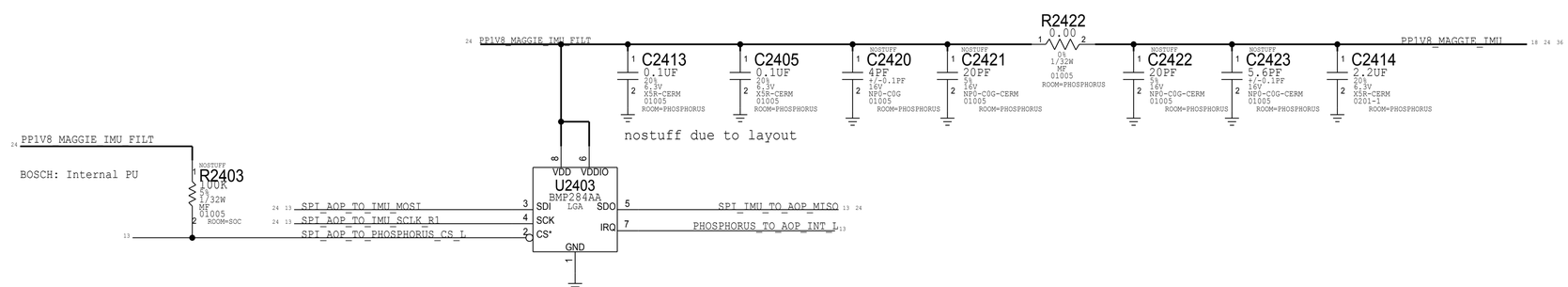

UTAH POWER

Scrub voltage selection

NOTE: OUTPUT IMPDEANCE MUST BE >0.005-OHM
IN ORDER TO MEET CAP ESR REQUIREMENT PER LDO SPEC.
VENDOR ALSO RECOMMENDS CIN = COUT FOR STABILITY

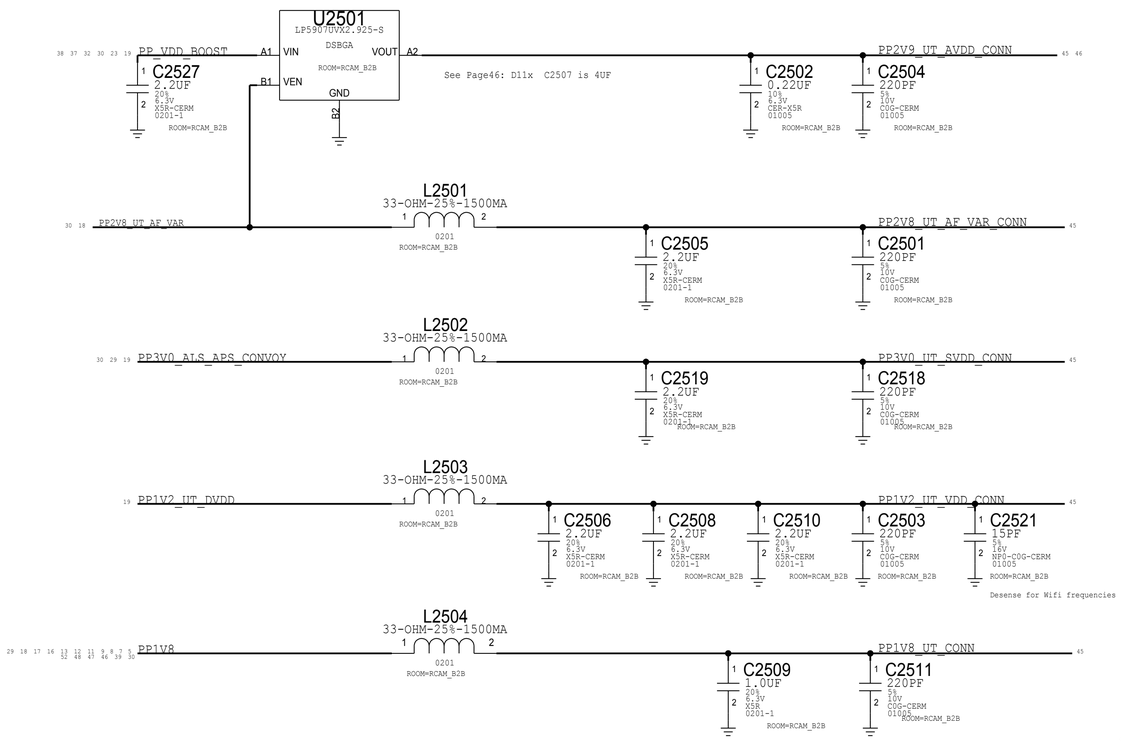

IO FILTERS

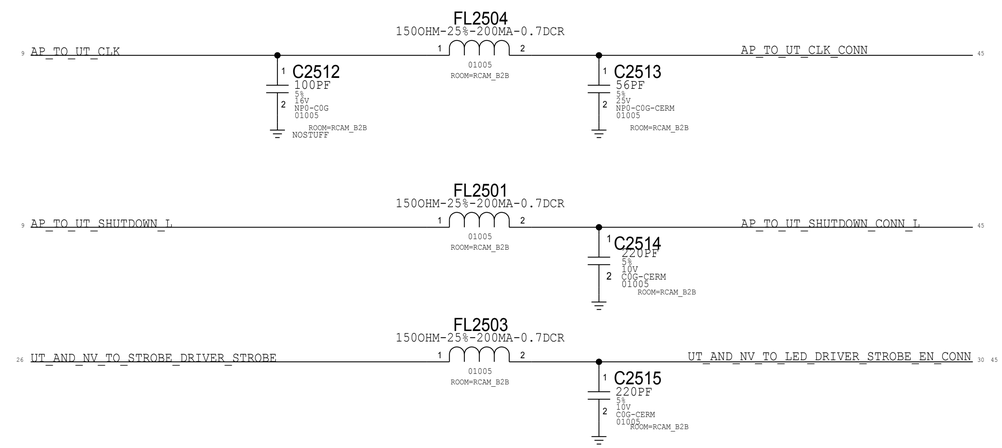

LPDP FILTERS

AC return path for LPDP which is referenced to GND and VDD_MAIN

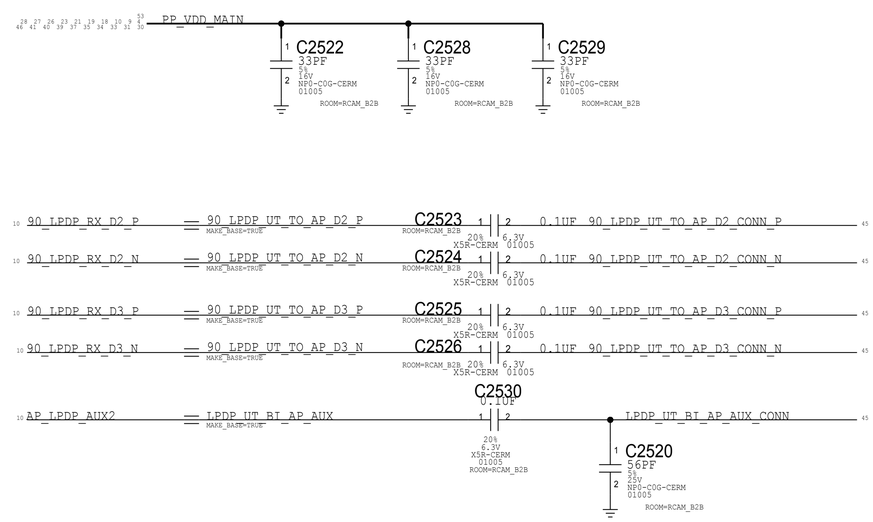

STROBE DRIVERS INSIDE NEO SIP MODULE

D10/sip_neo

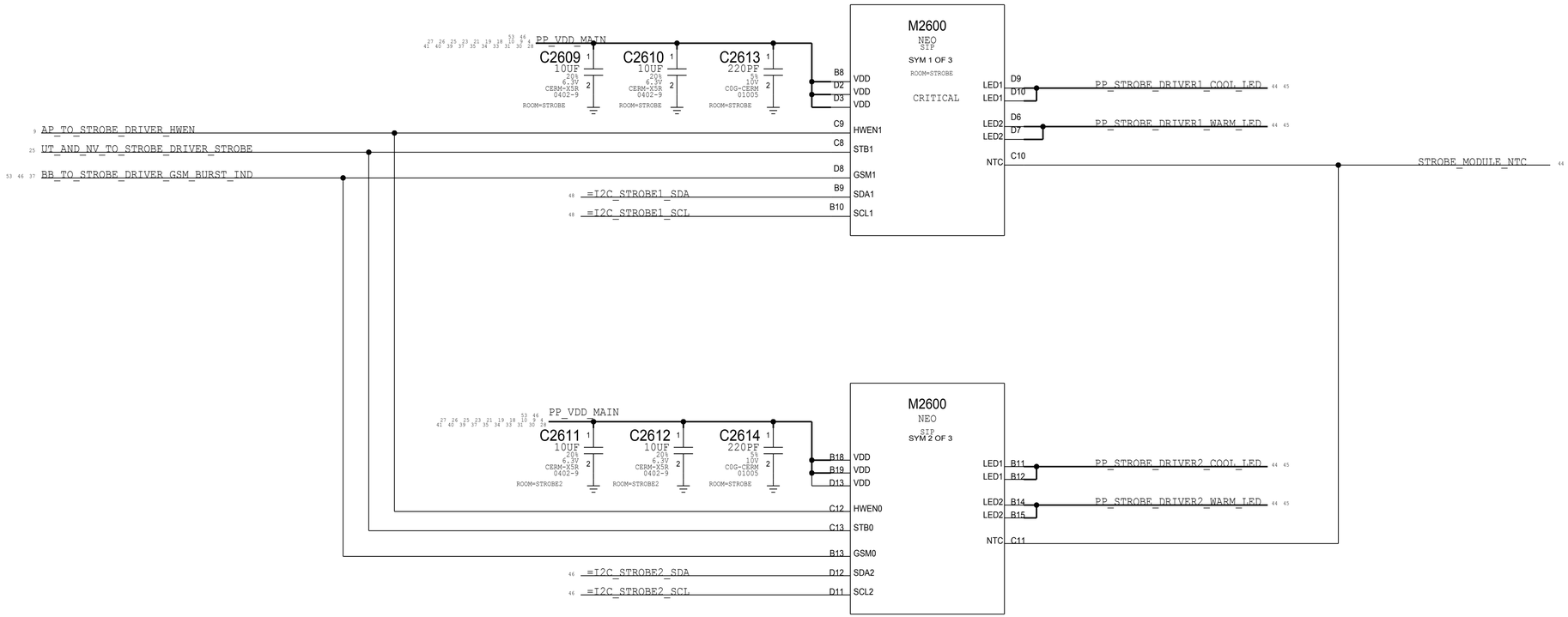

ACCESSORY BUCK

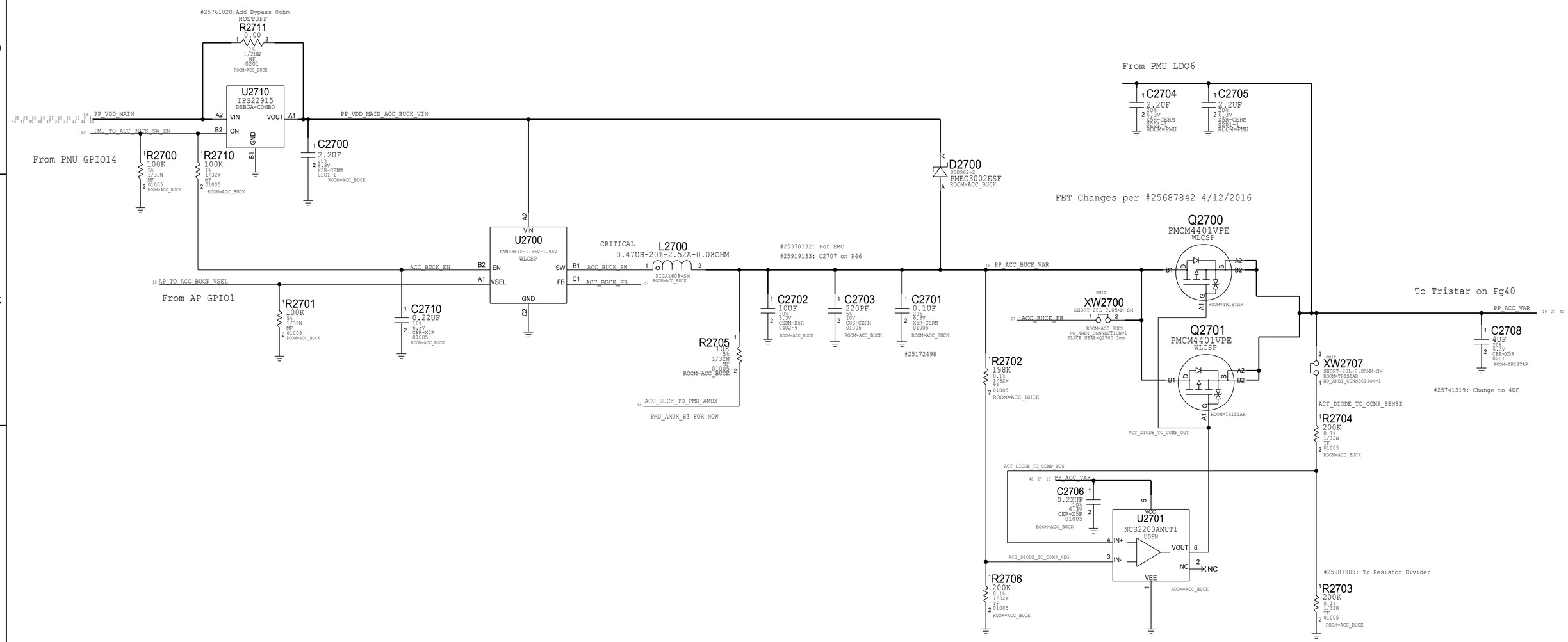

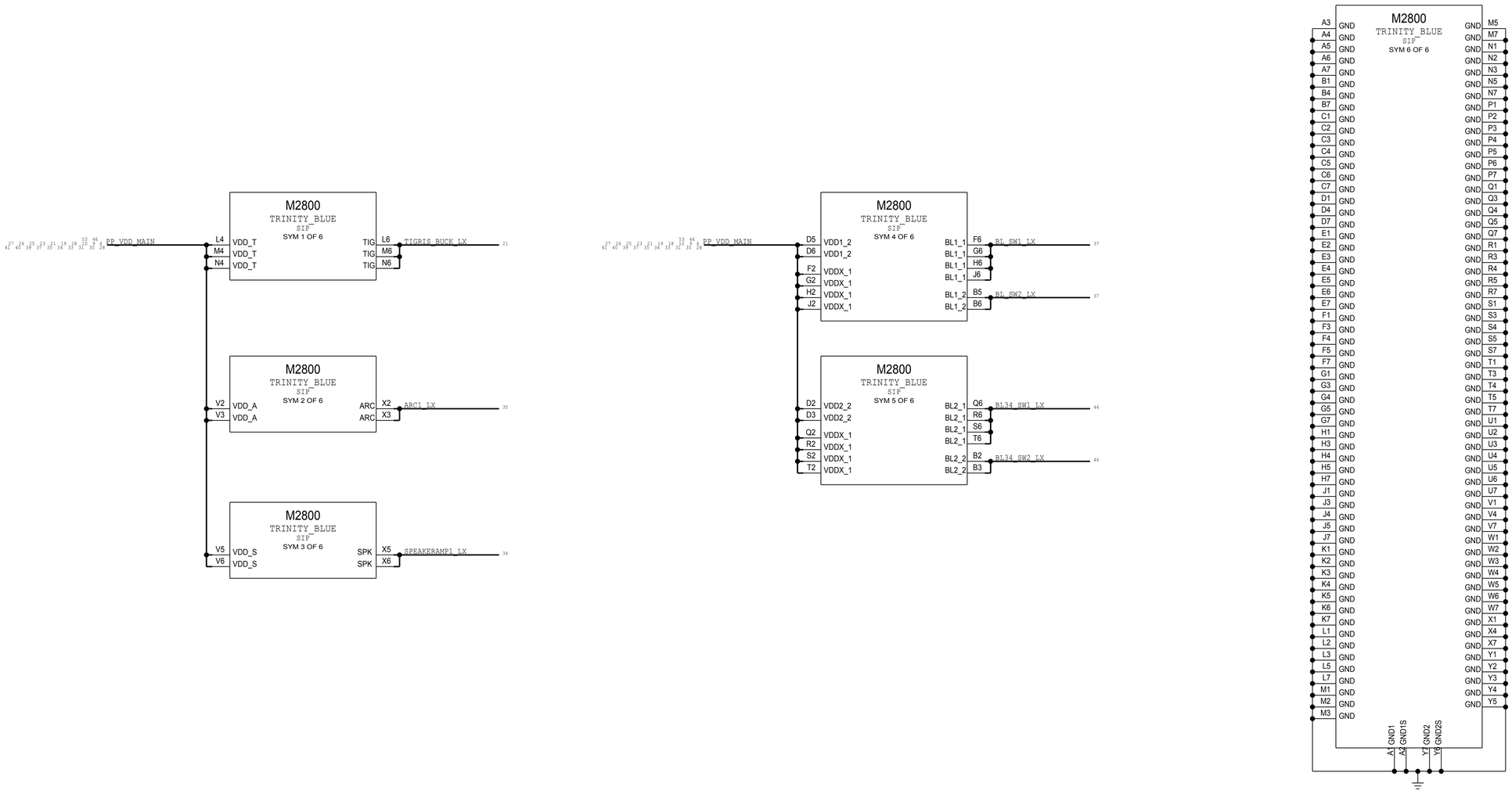
M2800
TRINITY_BLUE
SIP
SYM 1 OF 6
PP_VDD_MAIN
L4 VDD_T
M4 VDD_T
N4 VDD_T
TIG L6
TIG M6
TIG N6
TIGRIS_BUCK_LX
M2800
TRINITY_BLUE
SIP
SYM 2 OF 6
V2 VDD_A
V3 VDD_A
ARC X2
ARC X3
ARC1_LX
M2800
TRINITY_BLUE
SIP
SYM 3 OF 6
V5 VDD_S
V6 VDD_S
SPK X5
SPK X6
SPEAKERAMP1_LX
M2800
TRINITY_BLUE
SIP
SYM 4 OF 6
PP_VDD_MAIN
D5 VDD1_2
D6 VDD1_2
F2 VDDX_1
G2 VDDX_1
H2 VDDX_1
J2 VDDX_1
BL1_1 F6
BL1_1 G6
BL1_1 H6
BL1_1 J6
BL1_2 B5
BL1_2 B6
BL_SW1_LX
BL_SW2_LX
M2800
TRINITY_BLUE
SIP
SYM 5 OF 6
D2 VDD2_2
D3 VDD2_2
Q2 VDDX_1
R2 VDDX_1
S2 VDDX_1
T2 VDDX_1
BL2_1 Q6
BL2_1 R6
BL2_1 S6
BL2_1 T6
BL2_2 B2
BL2_2 B3
BL34_SW1_LX
BL34_SW2_LX
M2800
TRINITY_BLUE
SIP
SYM 6 OF 6
A3 GND
A4 GND
A5 GND
A6 GND
A7 GND
B1 GND
B4 GND
B7 GND
C1 GND
C2 GND
C3 GND
C4 GND
C5 GND
C6 GND
C7 GND
D1 GND
D4 GND
D7 GND
E1 GND
E2 GND
E3 GND
E4 GND
E5 GND
E6 GND
E7 GND
F1 GND
F3 GND
F4 GND
F5 GND
F7 GND
G1 GND
G3 GND
G4 GND
G5 GND
G7 GND
H1 GND
H3 GND
H4 GND
H5 GND
H7 GND
J1 GND
J3 GND
J4 GND
J5 GND
J7 GND
K1 GND
K2 GND
K3 GND
K4 GND
K5 GND
K6 GND
K7 GND
L1 GND
L2 GND
L3 GND
L5 GND
L7 GND
M1 GND
M2 GND
M3 GND
GND M5
GND M7
GND N1
GND N2
GND N3
GND N5
GND N7
GND P1
GND P2
GND P3
GND P4
GND P5
GND P6
GND P7
GND Q1
GND Q3
GND Q4
GND Q5
GND Q7
GND R1
GND R3
GND R4
GND R5
GND R7
GND S1
GND S3
GND S4
GND S5
GND S7
GND T1
GND T3
GND T4
GND T5
GND T7
GND U1
GND U2
GND U3
GND U4
GND U5
GND U6
GND U7
GND V1
GND V4
GND V7
GND W1
GND W2
GND W3
GND W4
GND W5
GND W6
GND W7
GND X1
GND X4
GND X7
GND Y1
GND Y2
GND Y3
GND Y4
GND Y5
A1 GND1
A2 GND1S
Y7 GND2
Y6 GND2S

NEW HAMPSHIRE POWER

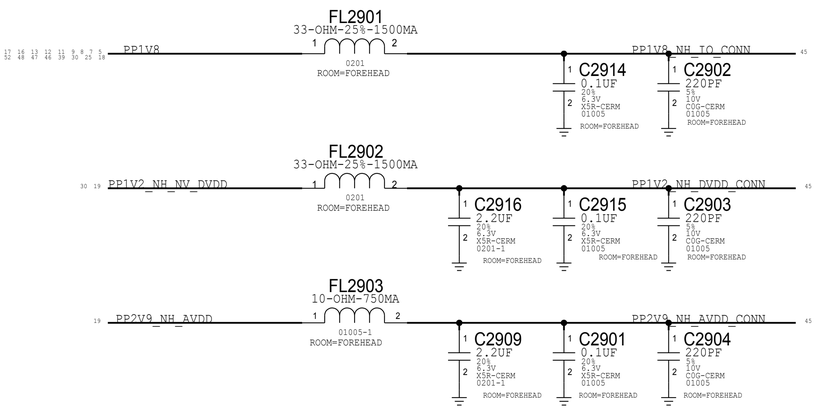

NEW HAMPSHIRE I/O

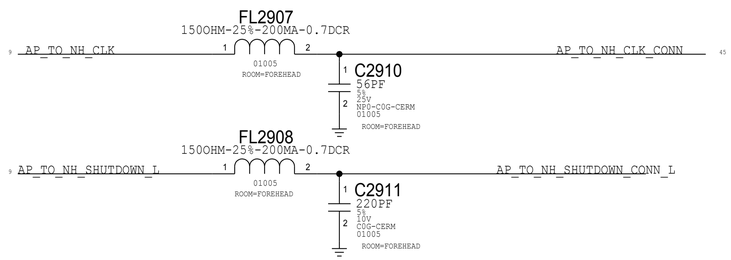

CONVOY I/O

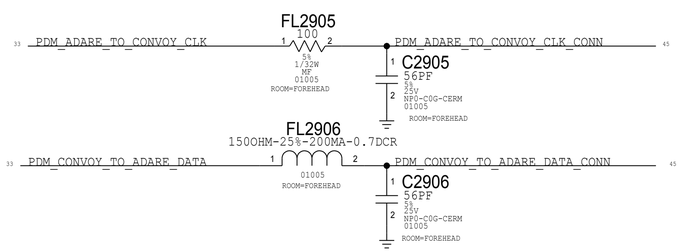

PROX/ALS I/O

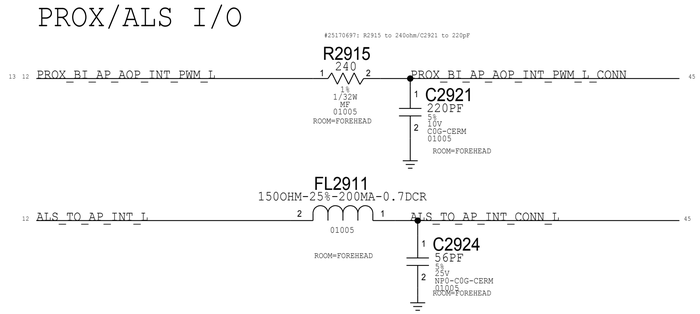

PROX, ALS, & CONVOY POWER

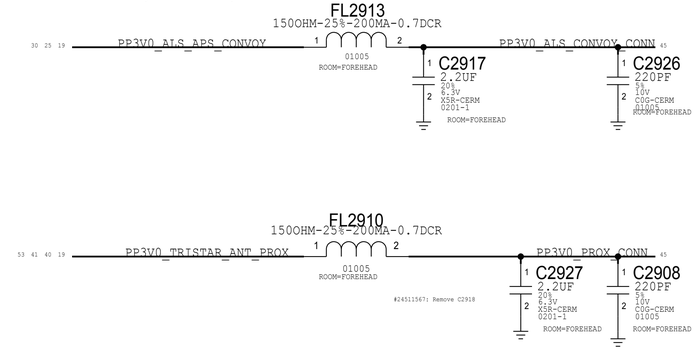

SPEAKER2

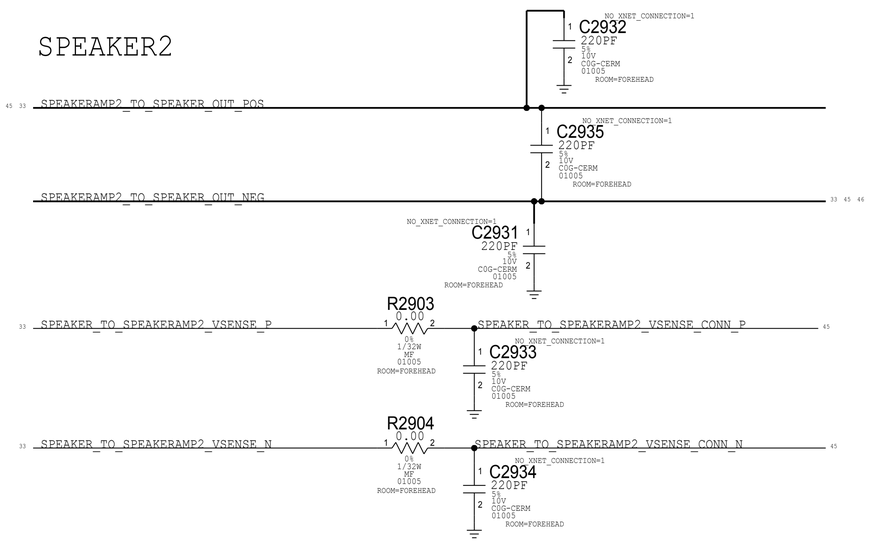

MIC3

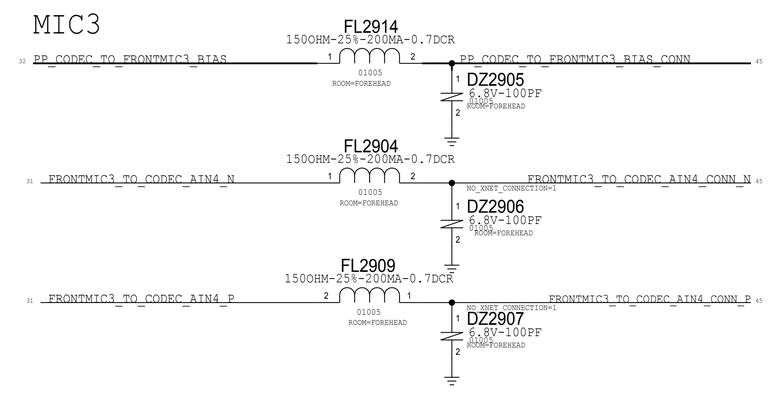

NEVADA POWER

NOTE: OUTPUT IMPDEANCE MUST BE 50.005-OHM

IN ORDER TO MEET CAP ESR REQUIREMENT PER LDO SPEC.
VENDOR ALSO RECOMMENDS CIN = COUT FOR STABILITY

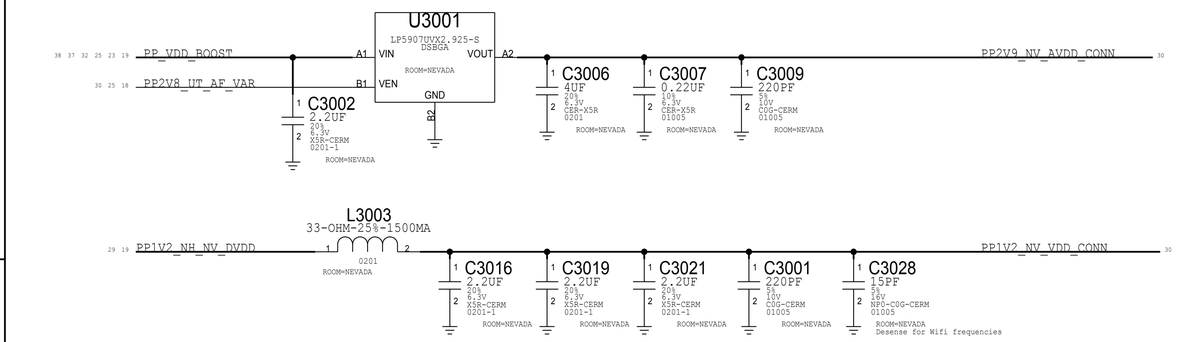

NEVADA CONNECTOR

THIS ONE ---> 516S00152 RCPT (USED ON MLB)
516S00151 PLUG

THIS PAGE UNIQUE TO LARGE FORM FACTOR
OTHER FORM FACTOR SPECIFIC PAGES:
4 - Mechanical
46 - FF Specific

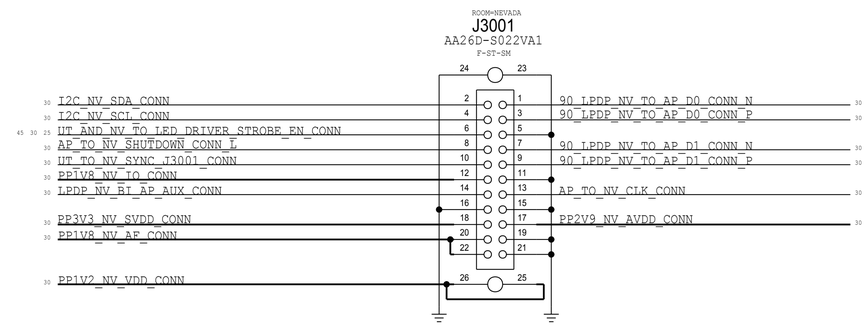

GPIO FILTERS

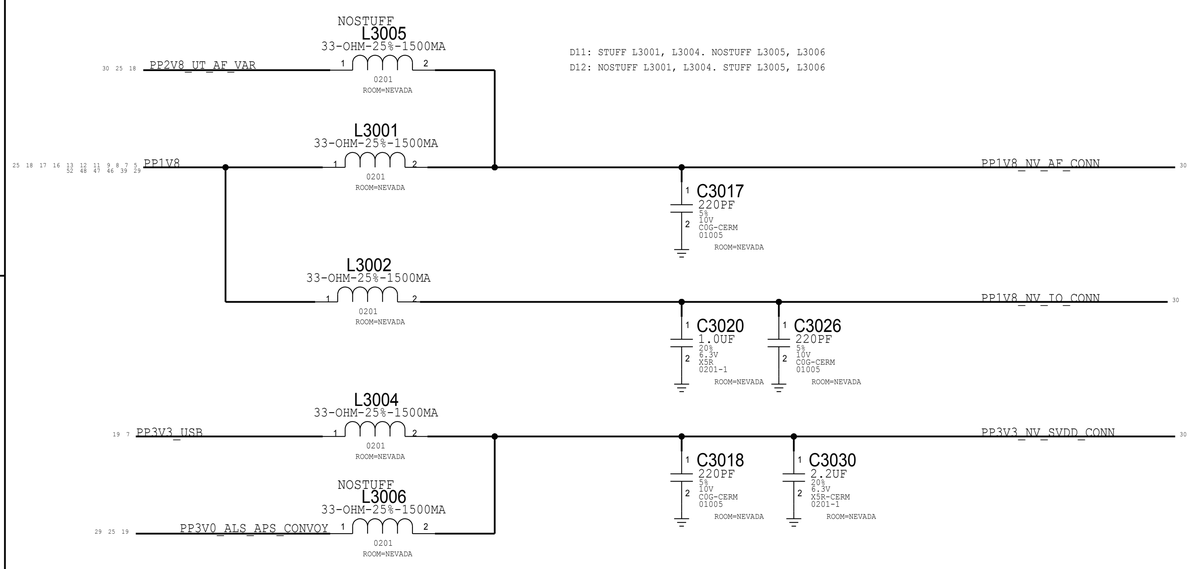

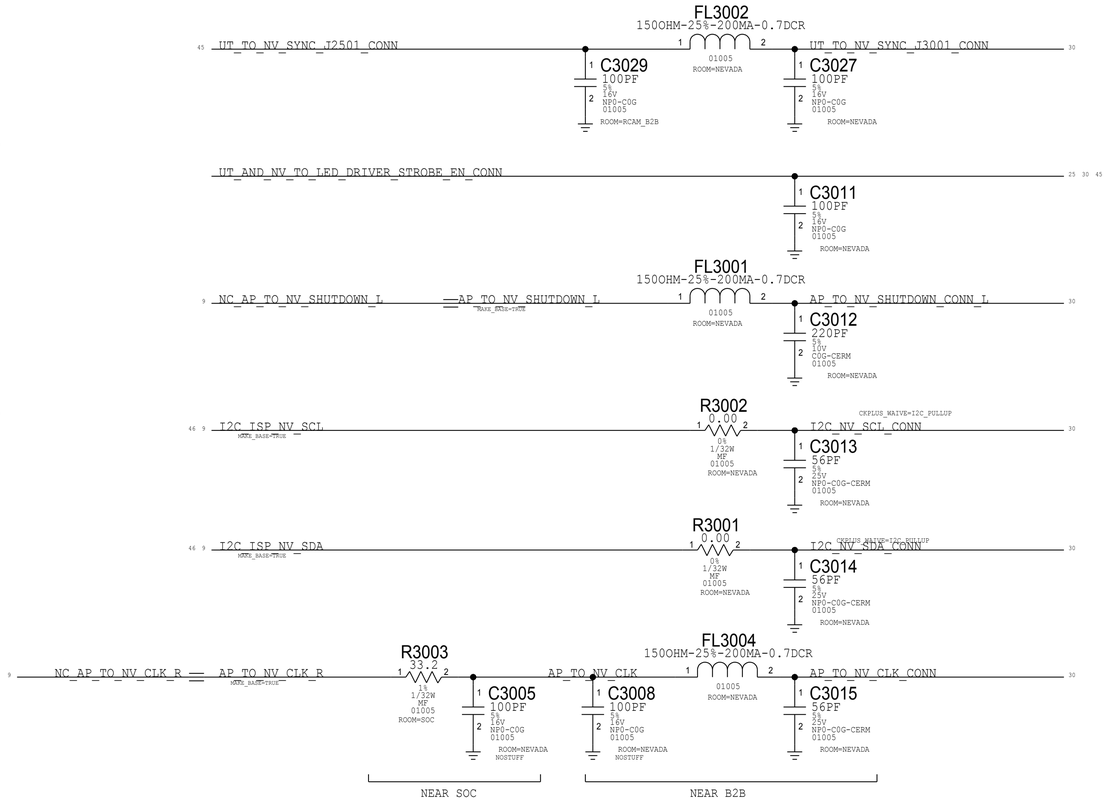

LPDP FILTERS

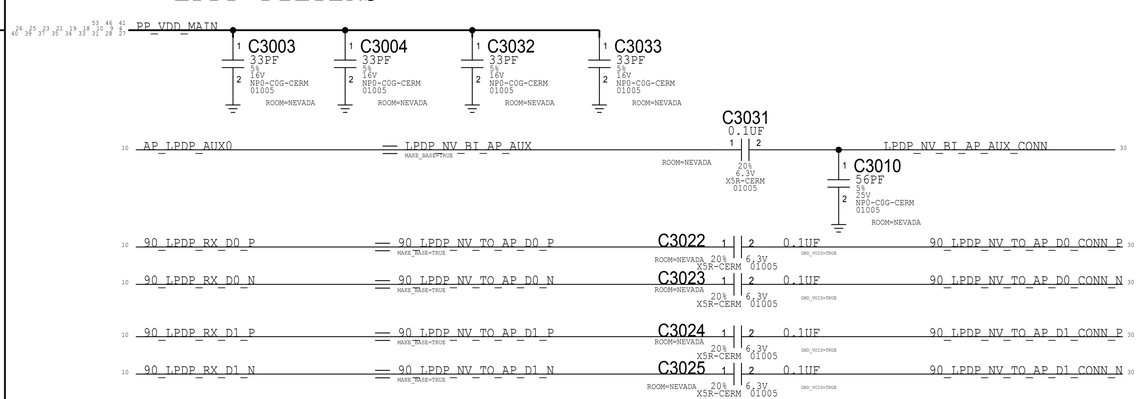

CALTRA AUDIO CODEC (ANALOG INPUTS & OUTPUTS)

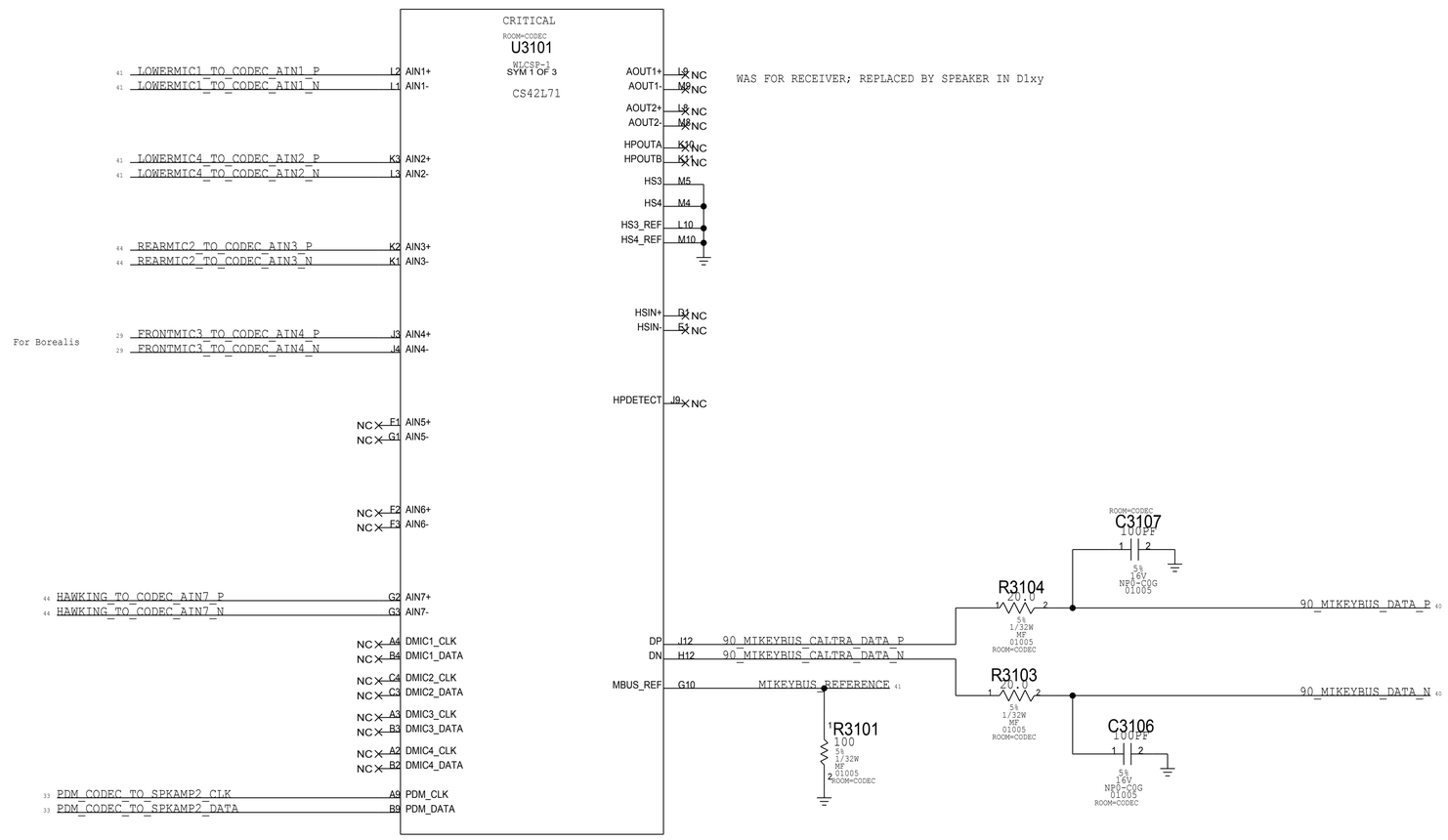

AC return path for Mikeybus which is referenced to GND and VDD_MAIN

Radar 21203307

CALTRA AUDIO CODEC (POWER & I/O)

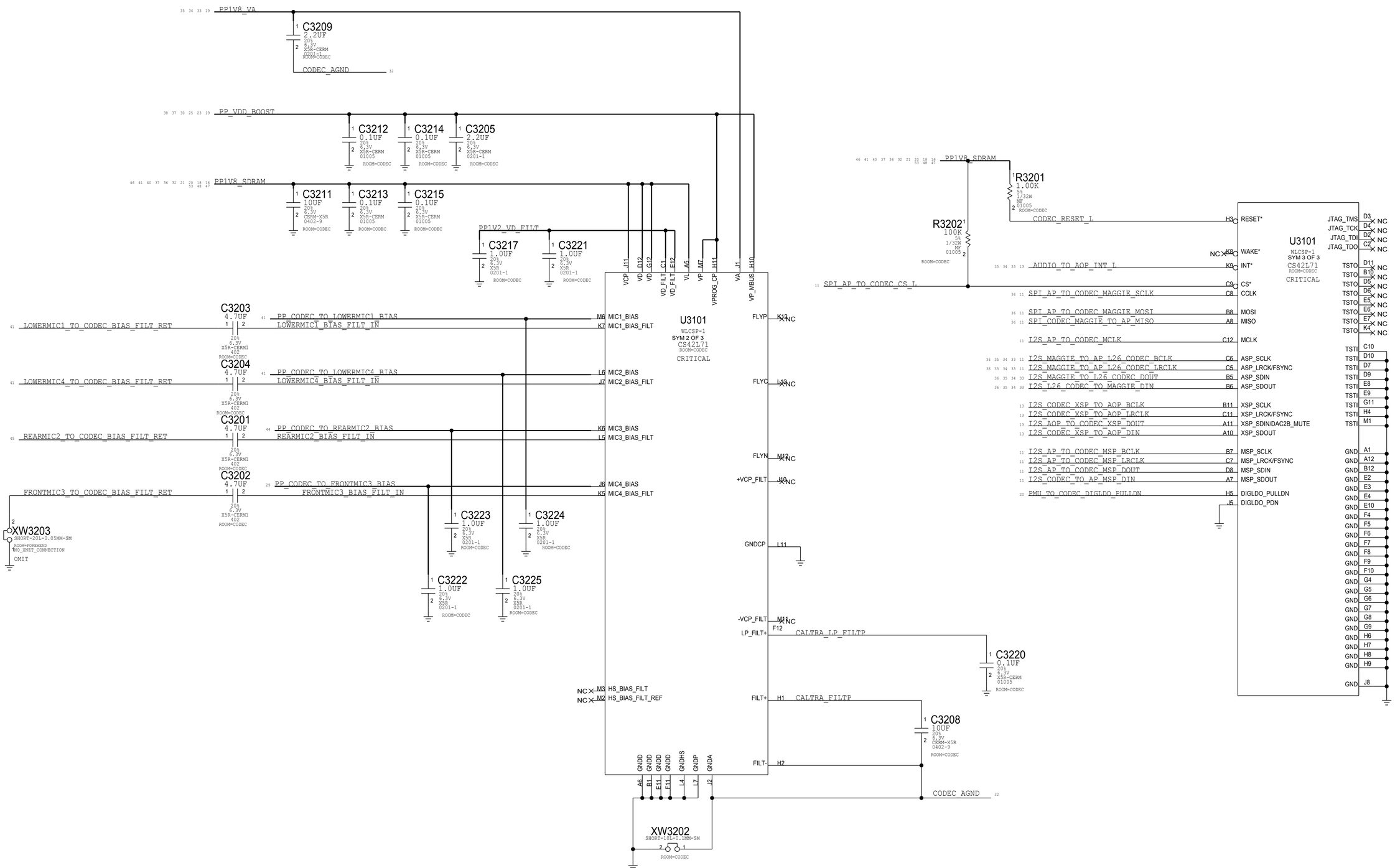

SPEAKER AMPLIFIER 2 (North)

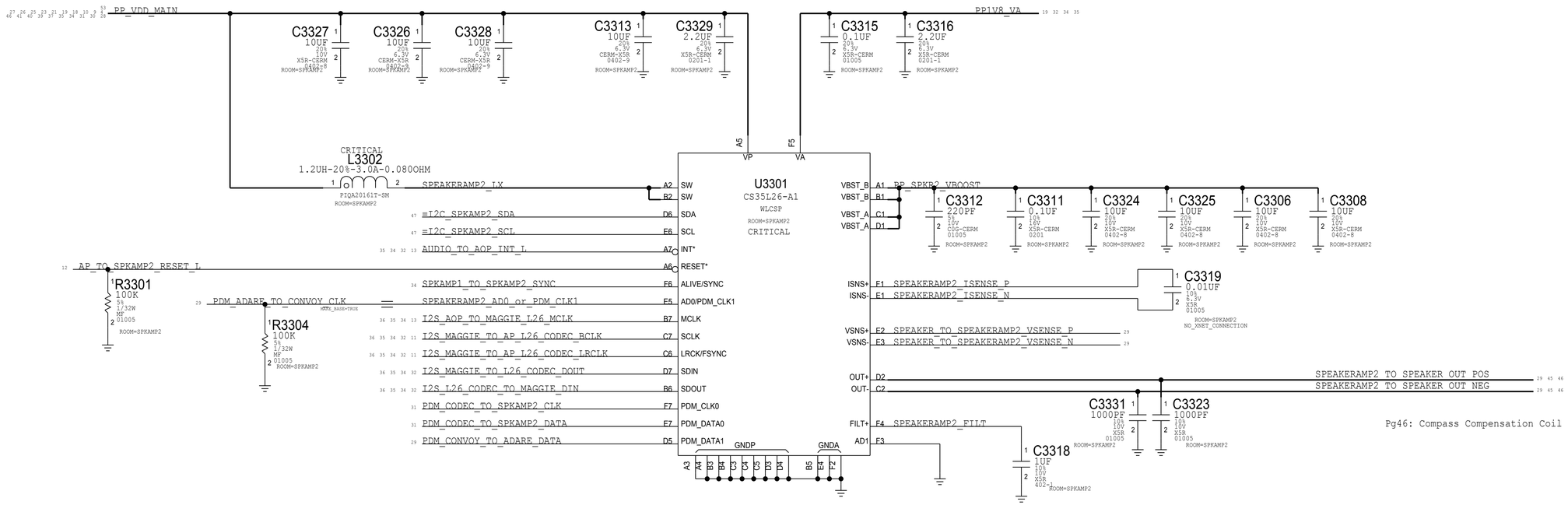

Pg46: Compass Compensation Coil

SPEAKER AMPLIFIER 1

(South)

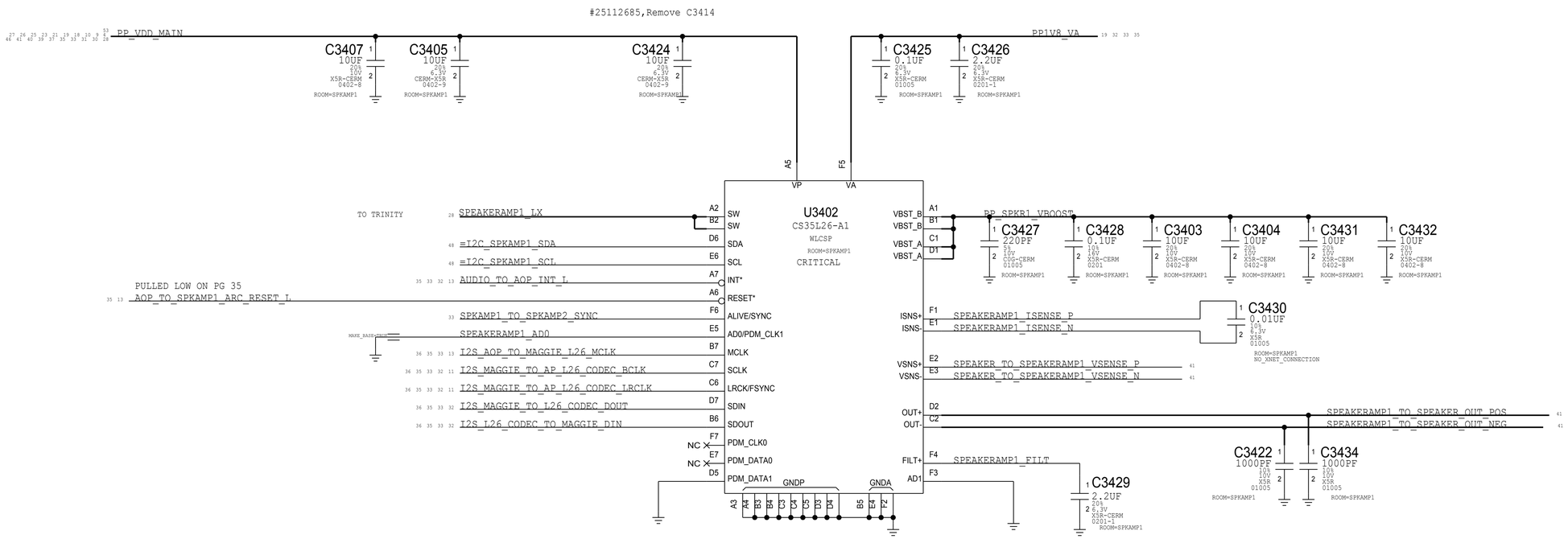

ARC DRIVER

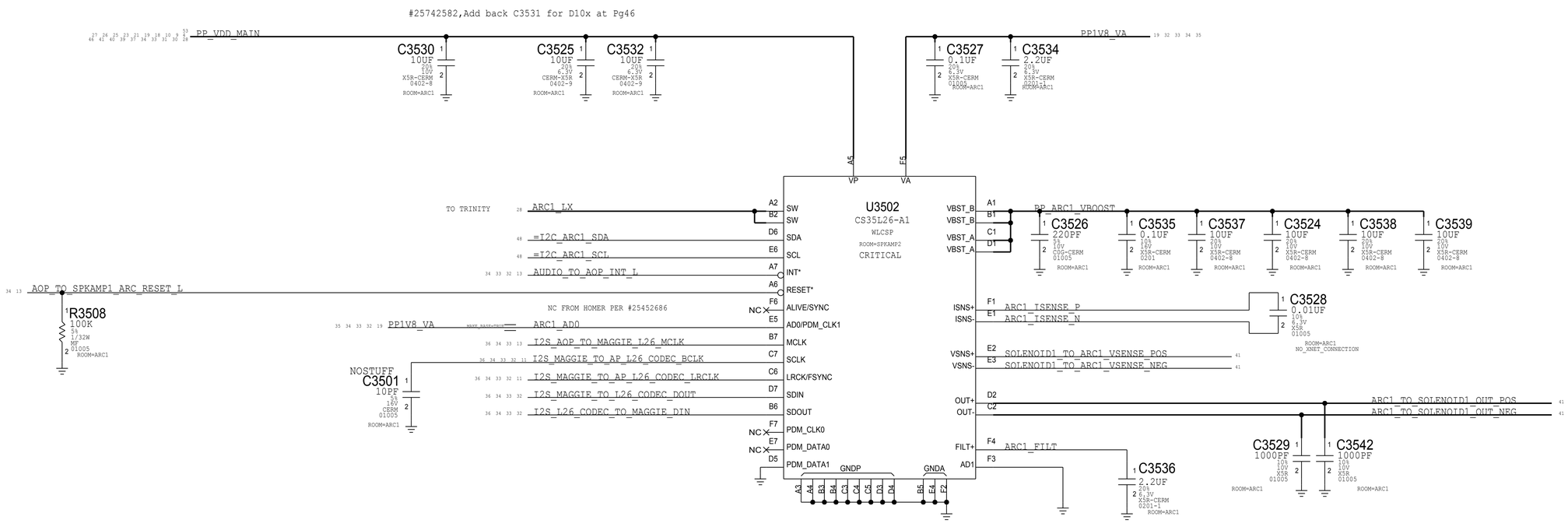
#25742582,Add back C3531 for D10x at Pg46
PP_VDD_MAIN
C3530 10UF 20% 10V X5R-CERM 0402-8 ROOM=ARC1
C3525 10UF 20% 6.3V CERM-X5R 0402-9 ROOM=ARC1
C3532 10UF 20% 6.3V CERM-X5R 0402-9 ROOM=ARC1
PP1V8_VA
C3527 0.1UF 20% 6.3V X5R-CERM 01005 ROOM=ARC1
C3534 2.2UF 20% 6.3V X5R-CERM 0201-1 ROOM=ARC1
U3502
CS35L26-A1
WLCSP
ROOM=SPKAMP2
CRITICAL
VP
VA
TO TRINITY
ARC1_LX
=I2C_ARC1_SDA
=I2C_ARC1_SCL
AUDIO_TO_AOP_INT_L
AOP_TO_SPKAMP1_ARC_RESET_L
R3508 100K 5% 1/32W MF 01005 ROOM=ARC1
NC FROM HOMER PER #25452686
PP1V8_VA
ARC1_AD0
I2S_AOP_TO_MAGGIE_L26_MCLK
I2S_MAGGIE_TO_AP_L26_CODEC_BCLK
I2S_MAGGIE_TO_AP_L26_CODEC_LRCLK
I2S_MAGGIE_TO_L26_CODEC_DOUT
I2S_L26_CODEC_TO_MAGGIE_DIN
NOSTUFF
C3501 10PF 5% 16V CERM 01005 ROOM=ARC1
SW
SDA
SCL
INT*
RESET*
ALIVE/SYNC
AD0/PDM_CLK1
MCLK
SCLK
LRCK/FSYNC
SDIN
SDOUT
PDM_CLK0
PDM_DATA0
PDM_DATA1
GNDP
GNDA
VBST_B
VBST_A
PP_ARC1_VBOOST
C3526 220PF 5% 16V C0G-CERM 01005 ROOM=ARC1
C3535 0.1UF 10% 16V X5R-CERM 0201 ROOM=ARC1
C3537 10UF 20% 10V X5R-CERM 0402-8 ROOM=ARC1
C3524 10UF 20% 10V X5R-CERM 0402-8 ROOM=ARC1
C3538 10UF 20% 10V X5R-CERM 0402-8 ROOM=ARC1
C3539 10UF 20% 10V X5R-CERM 0402-8 ROOM=ARC1
ISNS+
ISNS-
ARC1_ISENSE_P
ARC1_ISENSE_N
C3528 0.01UF 10% 6.3V X5R 01005 ROOM=ARC1 NO_XNET_CONNECTION
VSNS+
VSNS-
SOLENOID1_TO_ARC1_VSENSE_POS
SOLENOID1_TO_ARC1_VSENSE_NEG
OUT+
OUT-
ARC1_TO_SOLENOID1_OUT_POS
ARC1_TO_SOLENOID1_OUT_NEG
FILT+
ARC1_FILT
AD1
C3536 2.2UF 20% 6.3V X5R-CERM 0201-1 ROOM=ARC1
C3529 1000PF 10% 10V X5R 01005 ROOM=ARC1
C3542 1000PF 10% 10V X5R 01005 ROOM=ARC1

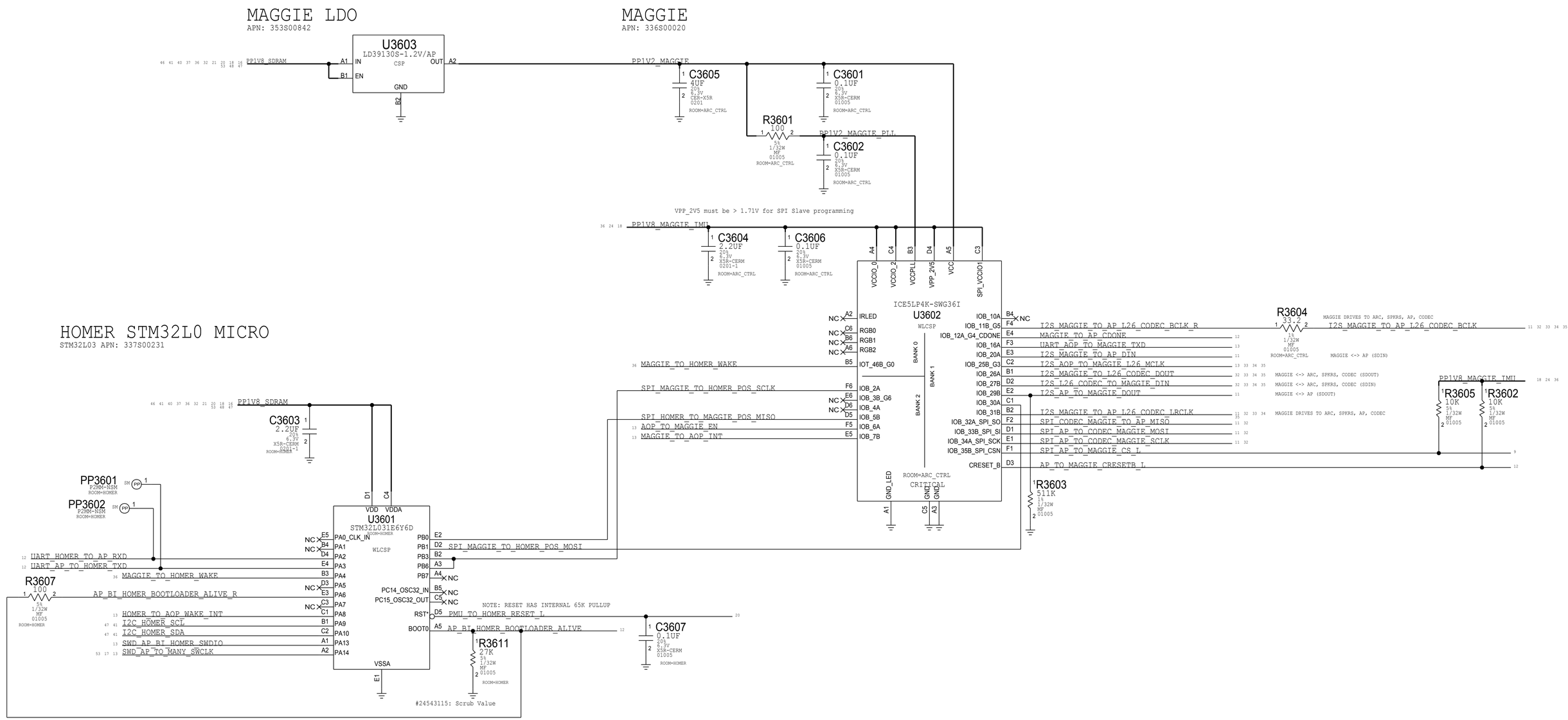
MAGGIE LDO
APN: 353S00842
U3603
LD39130S-1.2V/AP
CSP
PP1V8_SDRAM
A1 IN
B1 EN
OUT A2
GND
B2
MAGGIE
APN: 336S00020
PP1V2_MAGGIE
C3605
4UF
20%
6.3V
CER-X5R
0201
ROOM=ARC_CTRL
C3601
0.1UF
20%
6.3V
X5R-CERM
01005
ROOM=ARC_CTRL
R3601
100
5%
1/32W
MF
01005
ROOM=ARC_CTRL
PP1V2_MAGGIE_PLL
C3602
0.1UF
20%
6.3V
X5R-CERM
01005
ROOM=ARC_CTRL
VPP_2V5 must be > 1.71V for SPI Slave programming
PP1V8_MAGGIE_IMU
C3604
2.2UF
20%
6.3V
X5R-CERM
0201-1
ROOM=ARC_CTRL
C3606
0.1UF
20%
6.3V
X5R-CERM
01005
ROOM=ARC_CTRL
VCCIO_0 A4
VCCIO_2 C4
VCCPLL B3
VPP_2V5 D4
VCC A5
SPI_VCCIO1 C3
ICE5LP4K-SWG36I
U3602
WLCSP
IRLED A2
RGB0 C6
RGB1 B6
RGB2 A6
IOT_46B_G0 B5
IOB_2A F6
IOB_3B_G6 E6
IOB_4A D6
IOB_5B D5
IOB_6A F5
IOB_7B E5
BANK 0
BANK 1
BANK 2
IOB_10A B4
IOB_11B_G5 F4
IOB_12A_G4_CDONE E4
IOB_16A F3
IOB_20A E3
IOB_25B_G3 C2
IOB_26A B1
IOB_27B D2
IOB_29B E2
IOB_30A C1
IOB_31B B2
IOB_32A_SPI_SO F2
IOB_33B_SPI_SI D1
IOB_34A_SPI_SCK E1
IOB_35B_SPI_CSN F1
CRESET_B D3
GND_LED A1
GND C5
GND A3
ROOM=ARC_CTRL
CRITICAL
I2S_MAGGIE_TO_AP_L26_CODEC_BCLK_R
MAGGIE_TO_AP_CDONE
UART_AOP_TO_MAGGIE_TXD
I2S_MAGGIE_TO_AP_DIN
I2S_AOP_TO_MAGGIE_L26_MCLK
I2S_MAGGIE_TO_L26_CODEC_DOUT
I2S_L26_CODEC_TO_MAGGIE_DIN
I2S_AP_TO_MAGGIE_DOUT
I2S_MAGGIE_TO_AP_L26_CODEC_LRCLK
SPI_CODEC_MAGGIE_TO_AP_MISO
SPI_AP_TO_CODEC_MAGGIE_MOSI
SPI_AP_TO_CODEC_MAGGIE_SCLK
SPI_AP_TO_MAGGIE_CS_L
AP_TO_MAGGIE_CRESETB_L
R3604
33.2
1%
1/32W
MF
01005
ROOM=ARC_CTRL
MAGGIE DRIVES TO ARC, SPKRS, AP, CODEC
I2S_MAGGIE_TO_AP_L26_CODEC_BCLK
MAGGIE <-> AP (SDIN)
MAGGIE <-> ARC, SPKRS, CODEC (SDOUT)
MAGGIE <-> ARC, SPKRS, CODEC (SDIN)
MAGGIE <-> AP (SDOUT)
MAGGIE DRIVES TO ARC, SPKRS, AP, CODEC
R3603
511K
1%
1/32W
MF
01005
R3605
10K
5%
1/32W
MF
01005
R3602
10K
5%
1/32W
MF
01005
HOMER STM32L0 MICRO
STM32L03 APN: 337S00231
MAGGIE_TO_HOMER_WAKE
SPI_MAGGIE_TO_HOMER_POS_SCLK
SPI_HOMER_TO_MAGGIE_POS_MISO
AOP_TO_MAGGIE_EN
MAGGIE_TO_AOP_INT
PP1V8_SDRAM
C3603
2.2UF
20%
6.3V
X5R-CERM
0201-1
ROOM=HOMER
PP3601
PZMM=NSM
ROOM=HOMER
PP3602
PZMM=NSM
ROOM=HOMER
U3601
STM32L031E6Y6D
ROOM=HOMER
WLCSP
VDD D1
VDDA C4
VSSA E1
PA0_CLK_IN E5
PA1 B4
PA2 D4
PA3 E4
PA4 B3
PA5 D3
PA6 E3
PA7 C3
PA8 C1
PA9 B1
PA10 C2
PA13 A1
PA14 A2
PB0 E2
PB1 D2
PB3 B2
PB6 A3
PB7 A4
PC14_OSC32_IN B5
PC15_OSC32_OUT C5
RST D5
BOOT0 A5
SPI_MAGGIE_TO_HOMER_POS_MOSI
UART_HOMER_TO_AP_RXD
UART_AP_TO_HOMER_TXD
MAGGIE_TO_HOMER_WAKE
R3607
100
5%
1/32W
MF
01005
ROOM=HOMER
AP_BI_HOMER_BOOTLOADER_ALIVE_R
HOMER_TO_AOP_WAKE_INT
I2C_HOMER_SCL
I2C_HOMER_SDA
SWD_AP_BI_HOMER_SWDIO
SWD_AP_TO_MANY_SWCLK
NOTE: RESET HAS INTERNAL 65K PULLUP
PMU_TO_HOMER_RESET_L
AP_BI_HOMER_BOOTLOADER_ALIVE
R3611
27K
5%
1/32W
MF
01005
ROOM=HOMER
C3607
0.1UF
20%
6.3V
X5R-CERM
01005
ROOM=HOMER
#24543115: Scrub Value

DISPLAY & TOUCH - POWER SUPPLIES

CHESTNUT DISPLAY PMU

APN:338S1172

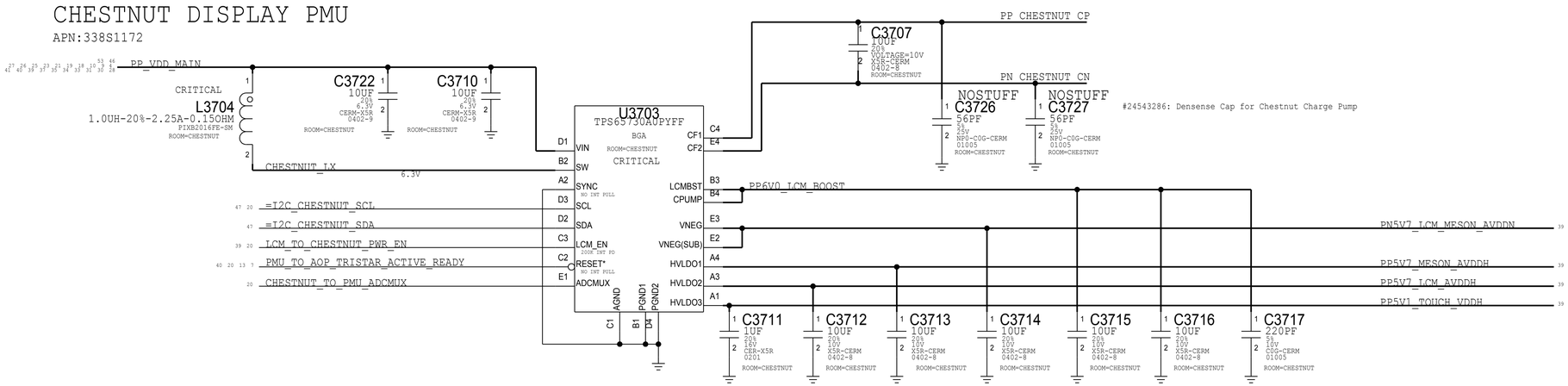

LED BACKLIGHT DRIVER - 6LED

APN:353s00640

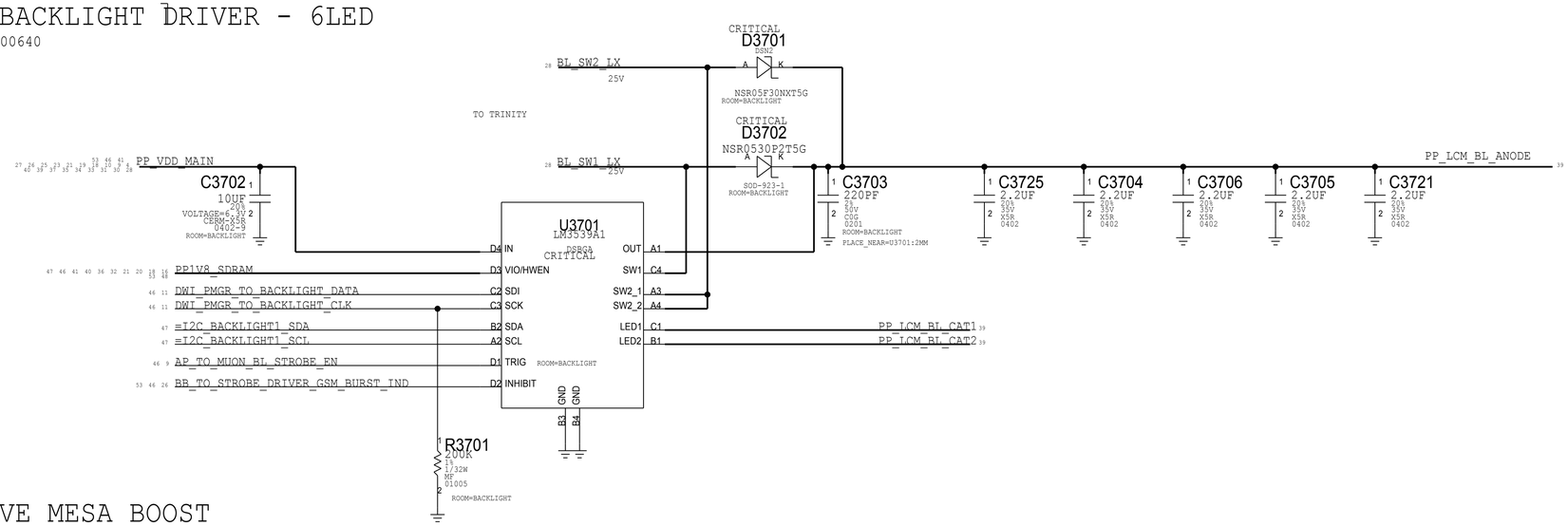

MOJAVE MESA BOOST

APN:353S00671

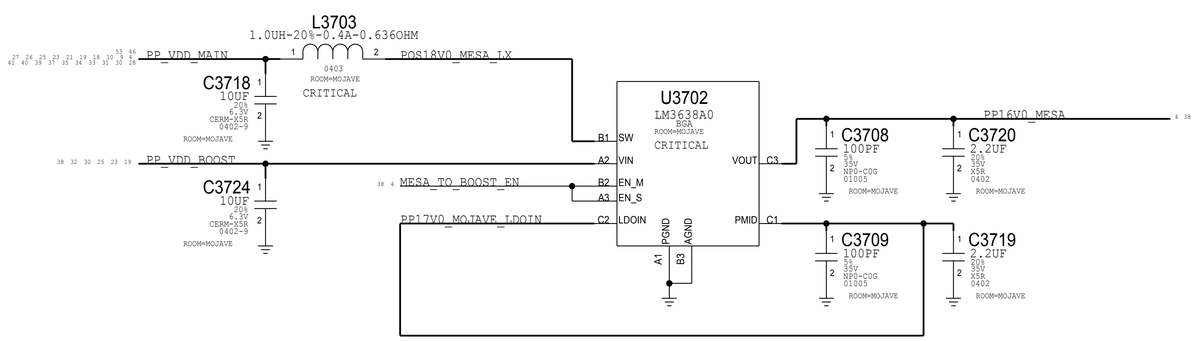

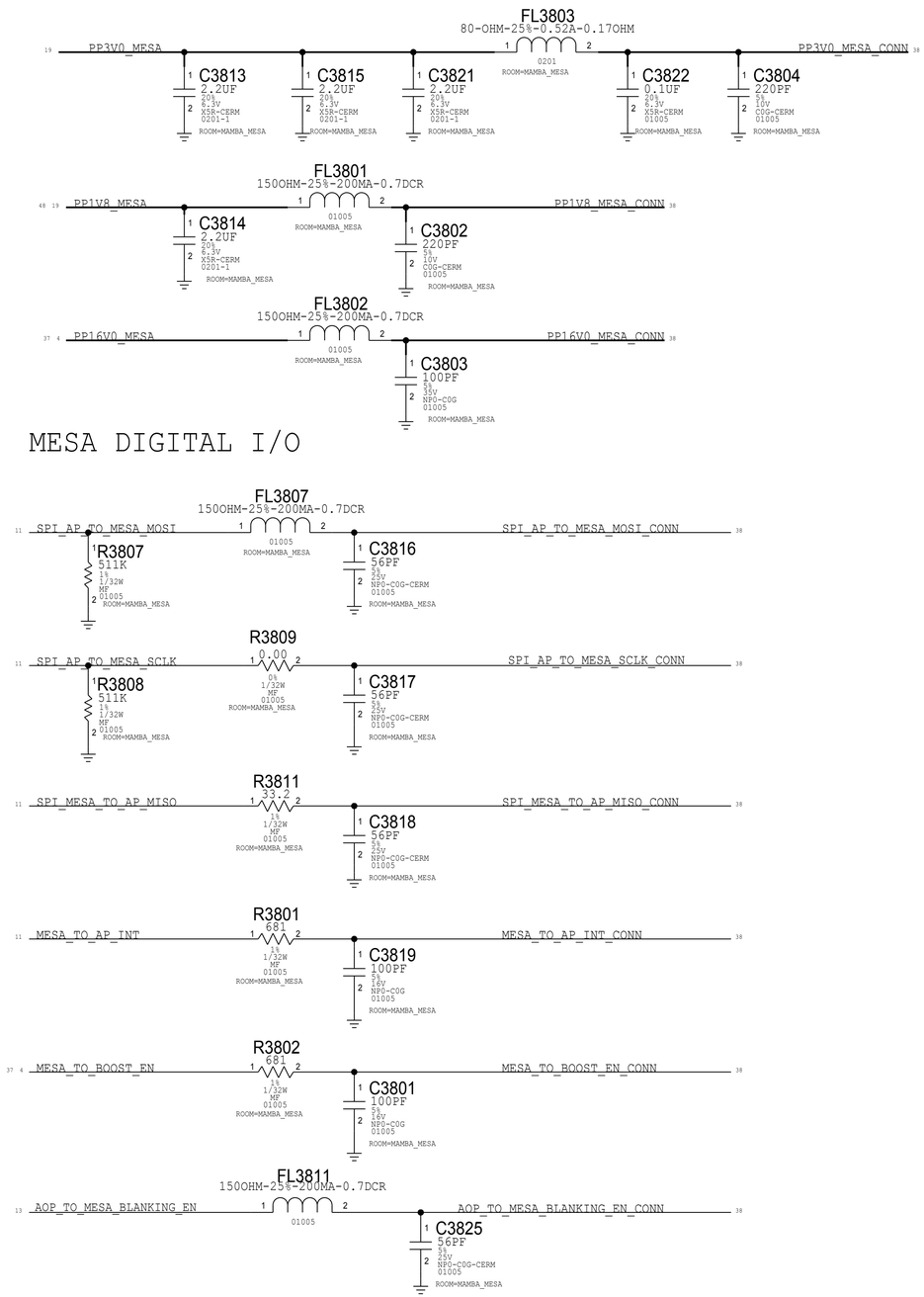
MESA POWER
FL3803
80-OHM-25%-0.52A-0.17OHM
PP3V0_MESA
PP3V0_MESA_CONN
C3813 2.2UF 20% 6.3V X5R-CERM 0201-1 ROOM=MAMBA_MESA
C3815 2.2UF 20% 6.3V X5R-CERM 0201-1 ROOM=MAMBA_MESA
C3821 2.2UF 20% 6.3V X5R-CERM 0201-1 ROOM=MAMBA_MESA
C3822 0.1UF 20% 6.3V X5R-CERM 01005 ROOM=MAMBA_MESA
C3804 220PF 5% 10V C0G-CERM 01005 ROOM=MAMBA_MESA
FL3801
1500HM-25%-200MA-0.7DCR
PP1V8_MESA
PP1V8_MESA_CONN
C3814 2.2UF 20% 6.3V X5R-CERM 0201-1 ROOM=MAMBA_MESA
C3802 220PF 5% 10V C0G-CERM 01005 ROOM=MAMBA_MESA
FL3802
1500HM-25%-200MA-0.7DCR
PP16V0_MESA
PP16V0_MESA_CONN
C3803 100PF 5% 50V NP0-C0G 01005 ROOM=MAMBA_MESA
MESA DIGITAL I/O
FL3807
1500HM-25%-200MA-0.7DCR
SPI_AP_TO_MESA_MOSI
SPI_AP_TO_MESA_MOSI_CONN
R3807 511K 1% 1/32W MF 01005 ROOM=MAMBA_MESA
C3816 56PF 5% 25V NP0-C0G-CERM 01005 ROOM=MAMBA_MESA
R3809 0.00 0% 1/32W MF 01005 ROOM=MAMBA_MESA
SPI_AP_TO_MESA_SCLK
SPI_AP_TO_MESA_SCLK_CONN
R3808 511K 1% 1/32W MF 01005 ROOM=MAMBA_MESA
C3817 56PF 5% 25V NP0-C0G-CERM 01005 ROOM=MAMBA_MESA
R3811 33.2 1% 1/32W MF 01005 ROOM=MAMBA_MESA
SPI_MESA_TO_AP_MISO
SPI_MESA_TO_AP_MISO_CONN
C3818 56PF 5% 25V NP0-C0G-CERM 01005 ROOM=MAMBA_MESA
R3801 681 1% 1/32W MF 01005 ROOM=MAMBA_MESA
MESA_TO_AP_INT
MESA_TO_AP_INT_CONN
C3819 100PF 5% 16V NP0-C0G 01005 ROOM=MAMBA_MESA
R3802 681 1% 1/32W MF 01005 ROOM=MAMBA_MESA
MESA_TO_BOOST_EN
MESA_TO_BOOST_EN_CONN
C3801 100PF 5% 16V NP0-C0G 01005 ROOM=MAMBA_MESA
FL3811
1500HM-25%-200MA-0.7DCR
AOP_TO_MESA_BLANKING_EN
AOP_TO_MESA_BLANKING_EN_CONN
C3825 56PF 5% 25V NP0-C0G-CERM 01005 ROOM=MAMBA_MESA

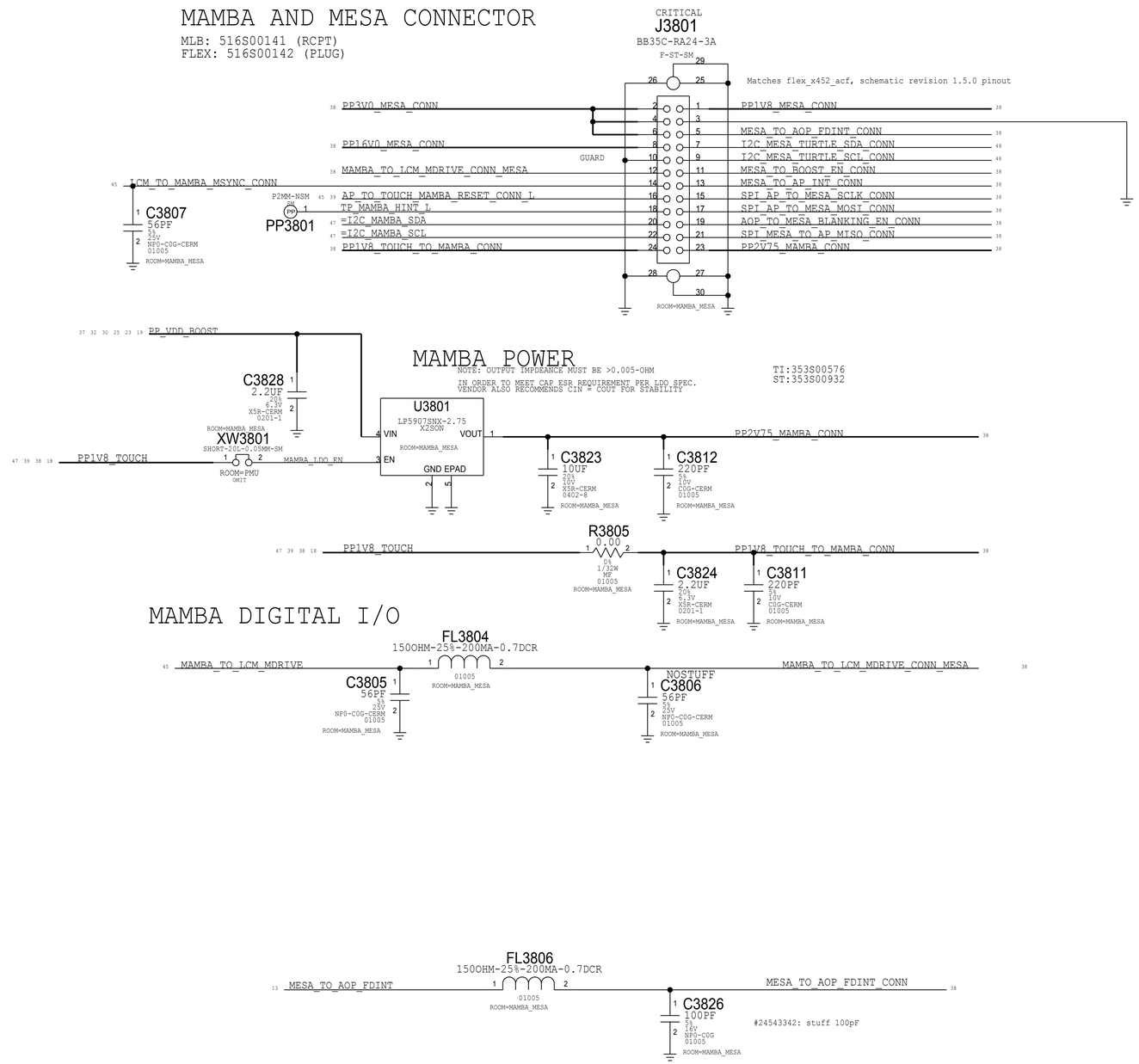
MAMBA AND MESA CONNECTOR
MLB: 516S00141 (RCPT)
FLEX: 516S00142 (PLUG)
CRITICAL
J3801
BB35C-RA24-3A
F-ST-SM
Matches flex_x452_acf, schematic revision 1.5.0 pinout
PP3V0_MESA_CONN
PP1V8_MESA_CONN
PP16V0_MESA_CONN
MESA_TO_AOP_FDINT_CONN
I2C_MESA_TURTLE_SDA_CONN
I2C_MESA_TURTLE_SCL_CONN
MAMBA_TO_LCM_MDRIVE_CONN_MESA
MESA_TO_BOOST_EN_CONN
MESA_TO_AP_INT_CONN
LCM_TO_MAMBA_MSYNC_CONN
AP_TO_TOUCH_MAMBA_RESET_CONN_L
SPI_AP_TO_MESA_SCLK_CONN
TP_MAMBA_HINT_L
SPI_AP_TO_MESA_MOSI_CONN
=I2C_MAMBA_SDA
AOP_TO_MESA_BLANKING_EN_CONN
=I2C_MAMBA_SCL
SPI_MESA_TO_AP_MISO_CONN
PP1V8_TOUCH_TO_MAMBA_CONN
PP2V75_MAMBA_CONN
GUARD
C3807 56PF 5% 25V NP0-C0G-CERM 01005 ROOM=MAMBA_MESA
PP3801
MAMBA POWER
NOTE: OUTPUT IMPDEANCE MUST BE >0.005-OHM
IN ORDER TO MEET CAP ESR REQUIREMENT PER LDO SPEC.
VENDOR ALSO RECOMMENDS CIN = COUT FOR STABILITY
TI:353S00576
ST:353S00932
PP_VDD_BOOST
C3828 2.2UF 20% 6.3V X5R-CERM 0201-1 ROOM=MAMBA_MESA
U3801
LP5907SNX-2.75
X2SON
VIN
VOUT
EN
GND EPAD
ROOM=MAMBA_MESA
PP1V8_TOUCH
XW3801
SHORT-20L-0.050M-SM
ROOM=PMU
MAMBA_LDO_EN
C3823 10UF 20% 10V X5R-CERM 0402-8 ROOM=MAMBA_MESA
C3812 220PF 5% 10V C0G-CERM 01005 ROOM=MAMBA_MESA
R3805 0.00 0% 1/32W MF 01005 ROOM=MAMBA_MESA
C3824 2.2UF 20% 6.3V X5R-CERM 0201-1 ROOM=MAMBA_MESA
C3811 220PF 5% 10V C0G-CERM 01005 ROOM=MAMBA_MESA
MAMBA DIGITAL I/O
FL3804
1500HM-25%-200MA-0.7DCR
MAMBA_TO_LCM_MDRIVE
MAMBA_TO_LCM_MDRIVE_CONN_MESA
C3805 56PF 5% 25V NP0-C0G-CERM 01005 ROOM=MAMBA_MESA
NOSTUFF
C3806 56PF 5% 25V NP0-C0G-CERM 01005 ROOM=MAMBA_MESA
FL3806
1500HM-25%-200MA-0.7DCR
MESA_TO_AOP_FDINT
MESA_TO_AOP_FDINT_CONN
C3826 100PF 5% 16V NP0-C0G 01005 ROOM=MAMBA_MESA
#24543342: stuff 100pF

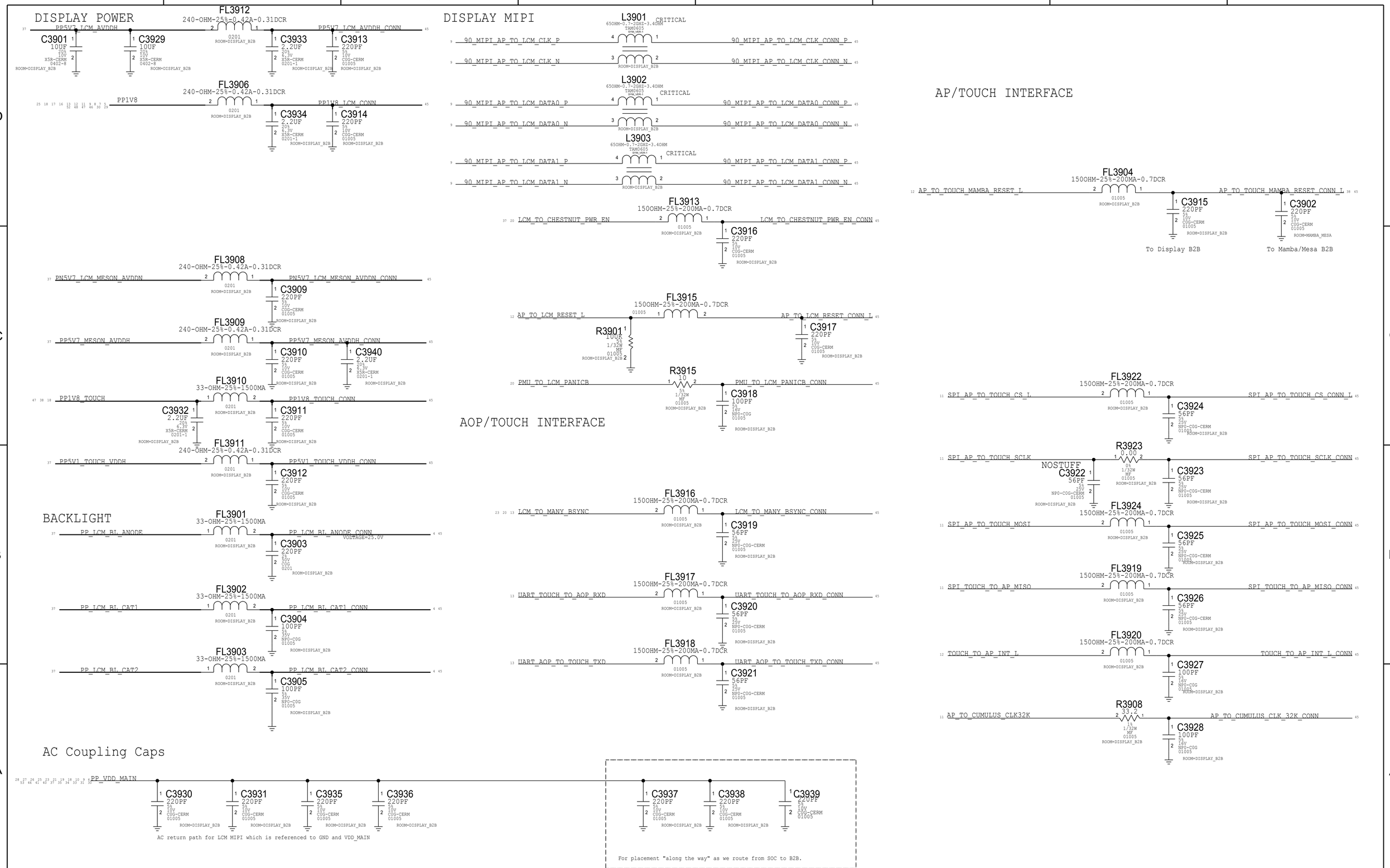
DISPLAY POWER
PP5V7_LCM_AVDDH
FL3912
240-OHM-25%-0.42A-0.31DCR
PP5V7_LCM_AVDDH_CONN
C3901 10UF 20% 10V X5R-CERM 0402-8
C3929 10UF 20% 10V X5R-CERM 0402-8
C3933 2.2UF 20% 6.3V X5R-CERM 0201-1
C3913 220PF 5% 10V C0G-CERM 01005
PP1V8
FL3906
240-OHM-25%-0.42A-0.31DCR
PP1V8_LCM_CONN
C3934 2.2UF 20% 6.3V X5R-CERM 0201-1
C3914 220PF 5% 10V C0G-CERM 01005
DISPLAY MIPI
L3901
650HM-0.7-2GHZ-3.4OHM
TAM0605
CRITICAL
90_MIPI_AP_TO_LCM_CLK_P
90_MIPI_AP_TO_LCM_CLK_N
90_MIPI_AP_TO_LCM_CLK_CONN_P
90_MIPI_AP_TO_LCM_CLK_CONN_N
L3902
90_MIPI_AP_TO_LCM_DATA0_P
90_MIPI_AP_TO_LCM_DATA0_N
90_MIPI_AP_TO_LCM_DATA0_CONN_P
90_MIPI_AP_TO_LCM_DATA0_CONN_N
L3903
90_MIPI_AP_TO_LCM_DATA1_P
90_MIPI_AP_TO_LCM_DATA1_N
90_MIPI_AP_TO_LCM_DATA1_CONN_P
90_MIPI_AP_TO_LCM_DATA1_CONN_N
FL3913
150OHM-25%-200MA-0.7DCR
LCM_TO_CHESTNUT_PWR_EN
LCM_TO_CHESTNUT_PWR_EN_CONN
C3916 220PF 5% 10V C0G-CERM 01005
AP/TOUCH INTERFACE
FL3904
150OHM-25%-200MA-0.7DCR
AP_TO_TOUCH_MAMBA_RESET_L
AP_TO_TOUCH_MAMBA_RESET_CONN_L
C3915 220PF 5% 10V C0G-CERM 01005
C3902 220PF 5% 10V C0G-CERM 01005
To Display B2B
To Mamba/Mesa B2B
FL3908
240-OHM-25%-0.42A-0.31DCR
PN5V7_LCM_MESON_AVDDN
PN5V7_LCM_MESON_AVDDN_CONN
C3909 220PF 5% 10V C0G-CERM 01005
FL3909
240-OHM-25%-0.42A-0.31DCR
PP5V7_MESON_AVDDH
PP5V7_MESON_AVDDH_CONN
C3910 220PF 5% 10V C0G-CERM 01005
C3940 2.2UF 20% 6.3V X5R-CERM 0201-1
FL3910
33-OHM-25%-1500MA
PP1V8_TOUCH
PP1V8_TOUCH_CONN
C3932 2.2UF 20% 6.3V X5R-CERM 0201-1
C3911 220PF 5% 10V C0G-CERM 01005
FL3911
240-OHM-25%-0.42A-0.31DCR
PP5V1_TOUCH_VDDH
PP5V1_TOUCH_VDDH_CONN
C3912 220PF 5% 10V C0G-CERM 01005
FL3915
150OHM-25%-200MA-0.7DCR
AP_TO_LCM_RESET_L
AP_TO_LCM_RESET_CONN_L
R3901 100K 5% 1/32W MF 01005
C3917 220PF 5% 10V C0G-CERM 01005
R3915 10 5% 1/32W MF 01005
PMU_TO_LCM_PANICB
PMU_TO_LCM_PANICB_CONN
C3918 100PF 5% 16V NPO-C0G 01005
AOP/TOUCH INTERFACE
FL3922
150OHM-25%-200MA-0.7DCR
SPI_AP_TO_TOUCH_CS_L
SPI_AP_TO_TOUCH_CS_CONN_L
C3924 56PF 5% 25V NPO-C0G-CERM 01005
R3923 0.00 5% 1/32W MF 01005
SPI_AP_TO_TOUCH_SCLK
SPI_AP_TO_TOUCH_SCLK_CONN
NOSTUFF
C3922 56PF 5% 25V NPO-C0G-CERM 01005
C3923 56PF 5% 25V NPO-C0G-CERM 01005
FL3924
150OHM-25%-200MA-0.7DCR
SPI_AP_TO_TOUCH_MOSI
SPI_AP_TO_TOUCH_MOSI_CONN
C3925 56PF 5% 25V NPO-C0G-CERM 01005
FL3919
150OHM-25%-200MA-0.7DCR
SPI_TOUCH_TO_AP_MISO
SPI_TOUCH_TO_AP_MISO_CONN
C3926 56PF 5% 25V NPO-C0G-CERM 01005
FL3916
150OHM-25%-200MA-0.7DCR
LCM_TO_MANY_BSYNC
LCM_TO_MANY_BSYNC_CONN
C3919 56PF 5% 25V NPO-C0G-CERM 01005
FL3920
150OHM-25%-200MA-0.7DCR
TOUCH_TO_AP_INT_L
TOUCH_TO_AP_INT_L_CONN
C3927 100PF 5% 16V NPO-C0G 01005
FL3917
150OHM-25%-200MA-0.7DCR
UART_TOUCH_TO_AOP_RXD
UART_TOUCH_TO_AOP_RXD_CONN
C3920 56PF 5% 25V NPO-C0G-CERM 01005
FL3918
150OHM-25%-200MA-0.7DCR
UART_AOP_TO_TOUCH_TXD
UART_AOP_TO_TOUCH_TXD_CONN
C3921 56PF 5% 25V NPO-C0G-CERM 01005
R3908 33.2 1% 1/32W MF 01005
AP_TO_CUMULUS_CLK32K
AP_TO_CUMULUS_CLK_32K_CONN
C3928 100PF 5% 16V NPO-C0G 01005
BACKLIGHT
FL3901
33-OHM-25%-1500MA
PP_LCM_BL_ANODE
PP_LCM_BL_ANODE_CONN
VOLTAGE=25.0V
C3903 220PF 5% 50V C0G 0201
FL3902
33-OHM-25%-1500MA
PP_LCM_BL_CAT1
PP_LCM_BL_CAT1_CONN
C3904 100PF 5% 35V NPO-C0G 01005
FL3903
33-OHM-25%-1500MA
PP_LCM_BL_CAT2
PP_LCM_BL_CAT2_CONN
C3905 100PF 5% 35V NPO-C0G 01005
AC Coupling Caps
PP_VDD_MAIN
C3930 220PF 5% 10V C0G-CERM 01005
C3931 220PF 5% 10V C0G-CERM 01005
C3935 220PF 5% 10V C0G-CERM 01005
C3936 220PF 5% 10V C0G-CERM 01005
AC return path for LCM MIPI which is referenced to GND and VDD_MAIN
C3937 220PF 5% 10V C0G-CERM 01005
C3938 220PF 5% 10V C0G-CERM 01005
C3939 220PF 5% 10V C0G-CERM 01005
For placement "along the way" as we route from SOC to B2B.

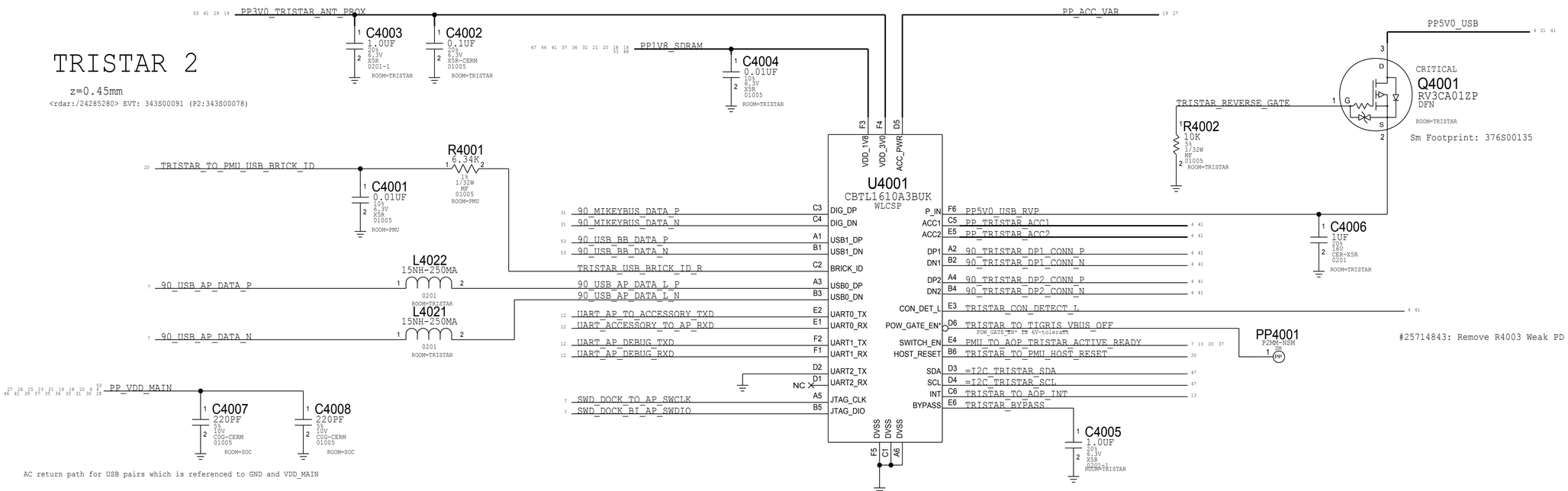
TRISTAR 2
z=0.45mm
<rdar:/24285280> EVT: 343S00091 (P2:343S00078)
PP3V0_TRISTAR_ANT_PROX
C4003
1.0UF
20%
6.3V
X5R
0201-1
ROOM=TRISTAR
C4002
0.1UF
20%
6.3V
X5R-CERM
01005
ROOM=TRISTAR
PP1V8_SDRAM
C4004
0.01UF
10%
6.3V
X5R
01005
ROOM=TRISTAR
PP_ACC_VAR
PP5V0_USB
CRITICAL
Q4001
RV3CA01ZP
DFN
ROOM=TRISTAR
Sm Footprint: 376S00135
TRISTAR_REVERSE_GATE
R4002
10K
5%
1/32W
MF
01005
ROOM=TRISTAR
R4001
6.34K
1%
1/32W
MF
01005
ROOM=PMU
TRISTAR_TO_PMU_USB_BRICK_ID
C4001
0.01UF
10%
6.3V
X5R
01005
ROOM=PMU
U4001
CBTL1610A3BUK
WLCSP
VDD_1V8
VDD_3V0
ACC_PWR
DIG_DP
DIG_DN
USB1_DP
USB1_DN
BRICK_ID
USB0_DP
USB0_DN
UART0_TX
UART0_RX
UART1_TX
UART1_RX
UART2_TX
UART2_RX
JTAG_CLK
JTAG_DIO
P_IN
ACC1
ACC2
DP1
DN1
DP2
DN2
CON_DET_L
POW_GATE_EN*
SWITCH_EN
HOST_RESET
SDA
SCL
INT
BYPASS
DVSS
NC
90_MIKEYBUS_DATA_P
90_MIKEYBUS_DATA_N
90_USB_BB_DATA_P
90_USB_BB_DATA_N
TRISTAR_USB_BRICK_ID_R
90_USB_AP_DATA_L_P
90_USB_AP_DATA_L_N
UART_AP_TO_ACCESSORY_TXD
UART_ACCESSORY_TO_AP_RXD
UART_AP_DEBUG_TXD
UART_AP_DEBUG_RXD
SWD_DOCK_TO_AP_SWCLK
SWD_DOCK_BI_AP_SWDIO
PP5V0_USB_RVP
PP_TRISTAR_ACC1
PP_TRISTAR_ACC2
90_TRISTAR_DP1_CONN_P
90_TRISTAR_DP1_CONN_N
90_TRISTAR_DP2_CONN_P
90_TRISTAR_DP2_CONN_N
TRISTAR_CON_DETECT_L
TRISTAR_TO_TIGRIS_VBUS_OFF
POW_GATE_EN* is 6V-tolerant
PMU_TO_AOP_TRISTAR_ACTIVE_READY
TRISTAR_TO_PMU_HOST_RESET
=I2C_TRISTAR_SDA
=I2C_TRISTAR_SCL
TRISTAR_TO_AOP_INT
TRISTAR_BYPASS
C4006
1UF
20%
16V
CER-X5R
0201
ROOM=TRISTAR
PP4001
P2MM-NSM
SM
#25714843: Remove R4003 Weak PD
L4022
15NH-250MA
0201
ROOM=TRISTAR
L4021
15NH-250MA
0201
ROOM=TRISTAR
90_USB_AP_DATA_P
90_USB_AP_DATA_N
PP_VDD_MAIN
C4007
220PF
5%
10V
C0G-CERM
01005
ROOM=SOC
C4008
220PF
5%
10V
C0G-CERM
01005
ROOM=SOC
C4005
1.0UF
20%
6.3V
X5R
0201-1
ROOM=TRISTAR
AC return path for USB pairs which is referenced to GND and VDD_MAIN

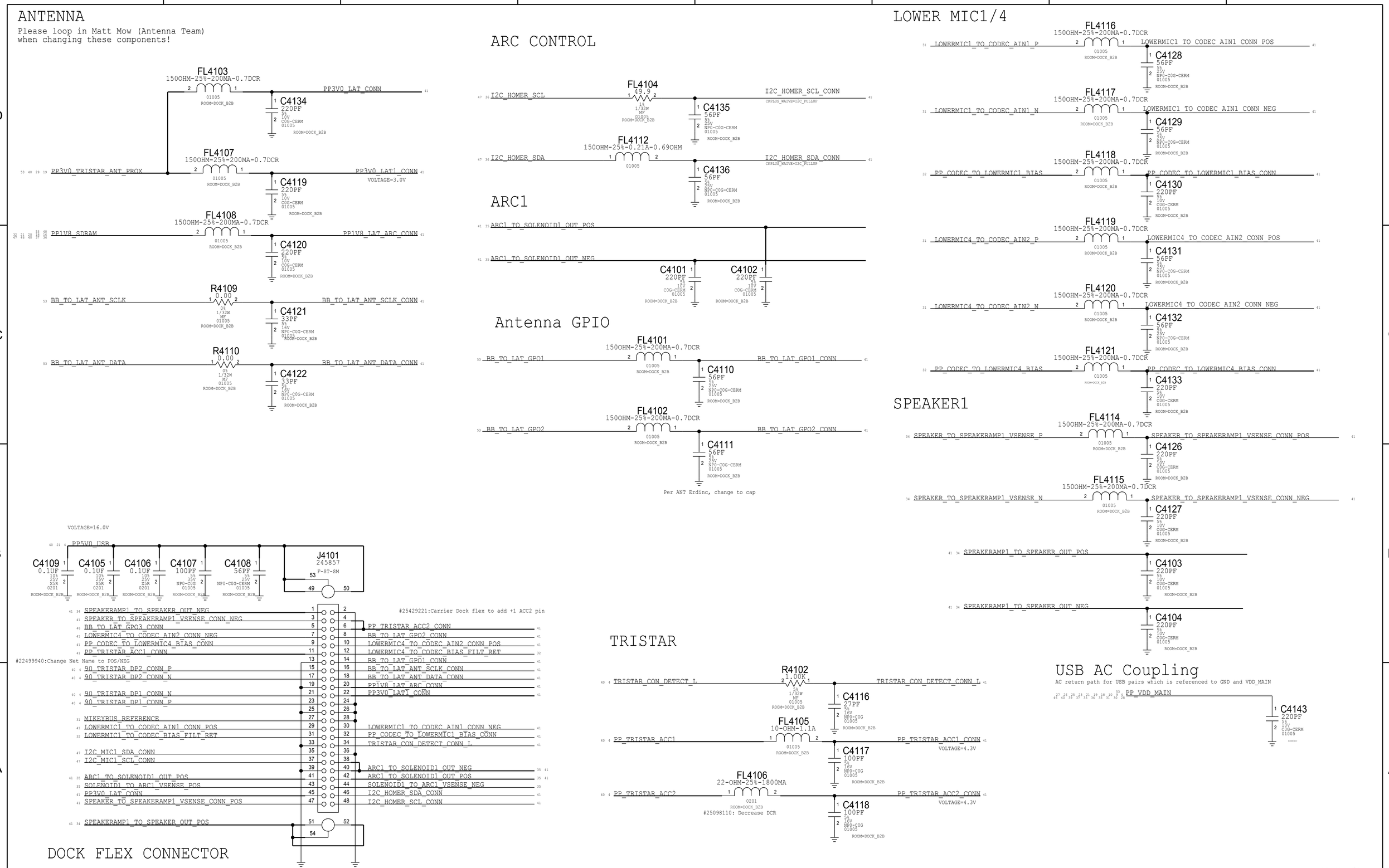
ANTENNA
Please loop in Matt Mow (Antenna Team)
when changing these components!
FL4103
1500HM-25%-200MA-0.7DCR
PP3V0_LAT_CONN
C4134
220PF
FL4107
1500HM-25%-200MA-0.7DCR
PP3V0_TRISTAR_ANT_PROX
PP3V0_LAT1_CONN
VOLTAGE=3.0V
C4119
220PF
FL4108
1500HM-25%-200MA-0.7DCR
PP1V8_SDRAM
PP1V8_LAT_ARC_CONN
C4120
220PF
R4109
0.00
BB_TO_LAT_ANT_SCLK
BB_TO_LAT_ANT_SCLK_CONN
C4121
33PF
R4110
0.00
BB_TO_LAT_ANT_DATA
BB_TO_LAT_ANT_DATA_CONN
C4122
33PF
ARC CONTROL
FL4104
49.9
I2C_HOMER_SCL
I2C_HOMER_SCL_CONN
C4135
56PF
FL4112
1500HM-25%-0.21A-0.69OHM
I2C_HOMER_SDA
I2C_HOMER_SDA_CONN
C4136
56PF
ARC1
ARC1_TO_SOLENOID1_OUT_POS
ARC1_TO_SOLENOID1_OUT_NEG
C4101
220PF
C4102
220PF
Antenna GPIO
FL4101
1500HM-25%-200MA-0.7DCR
BB_TO_LAT_GPO1
BB_TO_LAT_GPO1_CONN
C4110
56PF
FL4102
1500HM-25%-200MA-0.7DCR
BB_TO_LAT_GPO2
BB_TO_LAT_GPO2_CONN
C4111
56PF
Per ANT Erdinc, change to cap
LOWER MIC1/4
FL4116
1500HM-25%-200MA-0.7DCR
LOWERMIC1_TO_CODEC_AIN1_P
LOWERMIC1_TO_CODEC_AIN1_CONN_POS
C4128
56PF
FL4117
1500HM-25%-200MA-0.7DCR
LOWERMIC1_TO_CODEC_AIN1_N
LOWERMIC1_TO_CODEC_AIN1_CONN_NEG
C4129
56PF
FL4118
1500HM-25%-200MA-0.7DCR
PP_CODEC_TO_LOWERMIC1_BIAS
PP_CODEC_TO_LOWERMIC1_BIAS_CONN
C4130
220PF
FL4119
1500HM-25%-200MA-0.7DCR
LOWERMIC4_TO_CODEC_AIN2_P
LOWERMIC4_TO_CODEC_AIN2_CONN_POS
C4131
56PF
FL4120
1500HM-25%-200MA-0.7DCR
LOWERMIC4_TO_CODEC_AIN2_N
LOWERMIC4_TO_CODEC_AIN2_CONN_NEG
C4132
56PF
FL4121
1500HM-25%-200MA-0.7DCR
PP_CODEC_TO_LOWERMIC4_BIAS
PP_CODEC_TO_LOWERMIC4_BIAS_CONN
C4133
220PF
SPEAKER1
FL4114
1500HM-25%-200MA-0.7DCR
SPEAKER_TO_SPEAKERAMP1_VSENSE_P
SPEAKER_TO_SPEAKERAMP1_VSENSE_CONN_POS
C4126
220PF
FL4115
1500HM-25%-200MA-0.7DCR
SPEAKER_TO_SPEAKERAMP1_VSENSE_N
SPEAKER_TO_SPEAKERAMP1_VSENSE_CONN_NEG
C4127
220PF
SPEAKERAMP1_TO_SPEAKER_OUT_POS
C4103
220PF
SPEAKERAMP1_TO_SPEAKER_OUT_NEG
C4104
220PF
VOLTAGE=16.0V
PP5V0_USB
C4109
0.1UF
C4105
0.1UF
C4106
0.1UF
C4107
100PF
C4108
56PF
J4101
245857
F-ST-SM
#25429221:Carrier Dock flex to add +1 ACC2 pin
SPEAKERAMP1_TO_SPEAKER_OUT_NEG
SPEAKER_TO_SPEAKERAMP1_VSENSE_CONN_NEG
BB_TO_LAT_GPO3_CONN
LOWERMIC4_TO_CODEC_AIN2_CONN_NEG
PP_CODEC_TO_LOWERMIC4_BIAS_CONN
PP_TRISTAR_ACC1_CONN
#22499940:Change Net Name to POS/NEG
90_TRISTAR_DP2_CONN_P
90_TRISTAR_DP2_CONN_N
90_TRISTAR_DP1_CONN_N
90_TRISTAR_DP1_CONN_P
MIKEYBUS_REFERENCE
LOWERMIC1_TO_CODEC_AIN1_CONN_POS
LOWERMIC1_TO_CODEC_BIAS_FILT_RET
I2C_MIC1_SDA_CONN
I2C_MIC1_SCL_CONN
ARC1_TO_SOLENOID1_OUT_POS
SOLENOID1_TO_ARC1_VSENSE_POS
PP3V0_LAT_CONN
SPEAKER_TO_SPEAKERAMP1_VSENSE_CONN_POS
SPEAKERAMP1_TO_SPEAKER_OUT_POS
PP_TRISTAR_ACC2_CONN
BB_TO_LAT_GPO2_CONN
LOWERMIC4_TO_CODEC_AIN2_CONN_POS
LOWERMIC4_TO_CODEC_BIAS_FILT_RET
BB_TO_LAT_GPO1_CONN
BB_TO_LAT_ANT_SCLK_CONN
BB_TO_LAT_ANT_DATA_CONN
PP1V8_LAT_ARC_CONN
PP3V0_LAT1_CONN
LOWERMIC1_TO_CODEC_AIN1_CONN_NEG
PP_CODEC_TO_LOWERMIC1_BIAS_CONN
TRISTAR_CON_DETECT_CONN_L
ARC1_TO_SOLENOID1_OUT_NEG
ARC1_TO_SOLENOID1_OUT_POS
SOLENOID1_TO_ARC1_VSENSE_NEG
I2C_HOMER_SDA_CONN
I2C_HOMER_SCL_CONN
DOCK FLEX CONNECTOR
TRISTAR
R4102
1.00K
TRISTAR_CON_DETECT_L
TRISTAR_CON_DETECT_CONN_L
C4116
27PF
FL4105
10-OHM-1.1A
PP_TRISTAR_ACC1
PP_TRISTAR_ACC1_CONN
VOLTAGE=4.3V
C4117
100PF
FL4106
22-OHM-25%-1800MA
PP_TRISTAR_ACC2
PP_TRISTAR_ACC2_CONN
VOLTAGE=4.3V
C4118
100PF
#25098110: Decrease DCR
USB AC Coupling
AC return path for USB pairs which is referenced to GND and VDD_MAIN
PP_VDD_MAIN
C4143
220PF

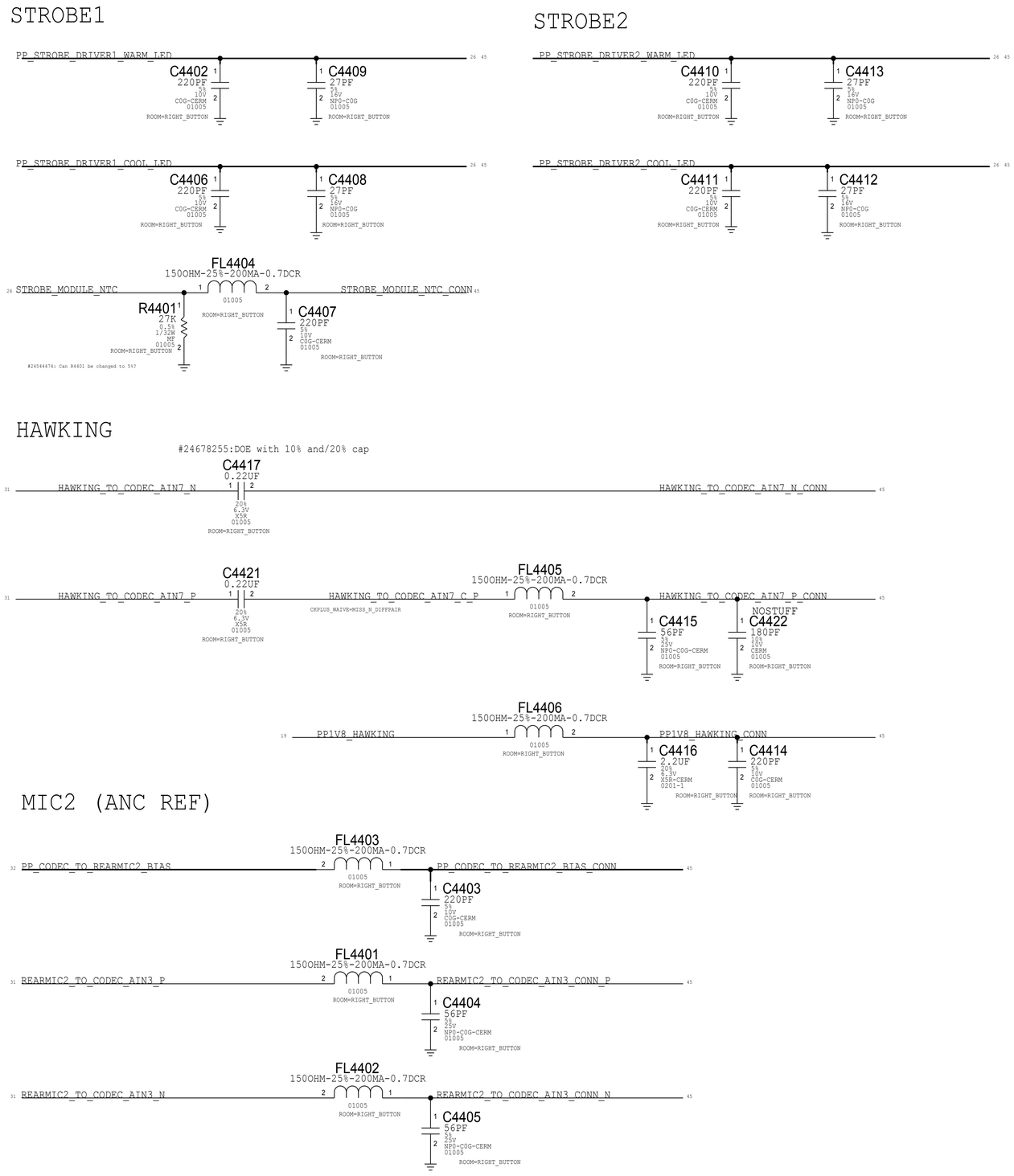
STROBE1
PP_STROBE_DRIVER1_WARM_LED
C4402 220PF 5% 10V C0G-CERM 01005 ROOM=RIGHT_BUTTON
C4409 27PF 5% 16V NP0-C0G 01005 ROOM=RIGHT_BUTTON
PP_STROBE_DRIVER1_COOL_LED
C4406 220PF 5% 10V C0G-CERM 01005 ROOM=RIGHT_BUTTON
C4408 27PF 5% 16V NP0-C0G 01005 ROOM=RIGHT_BUTTON
FL4404 1500HM-25%-200MA-0.7DCR 01005 ROOM=RIGHT_BUTTON
STROBE_MODULE_NTC
STROBE_MODULE_NTC_CONN
R4401 27K 0.5% 1/32W MF 01005 ROOM=RIGHT_BUTTON
C4407 220PF 5% 10V C0G-CERM 01005 ROOM=RIGHT_BUTTON
#24544474: Can R4401 be changed to 5%?
STROBE2
PP_STROBE_DRIVER2_WARM_LED
C4410 220PF 5% 10V C0G-CERM 01005 ROOM=RIGHT_BUTTON
C4413 27PF 5% 16V NP0-C0G 01005 ROOM=RIGHT_BUTTON
PP_STROBE_DRIVER2_COOL_LED
C4411 220PF 5% 10V C0G-CERM 01005 ROOM=RIGHT_BUTTON
C4412 27PF 5% 16V NP0-C0G 01005 ROOM=RIGHT_BUTTON
HAWKING
#24678255:DOE with 10% and/20% cap
C4417 0.22UF 20% 6.3V X5R 01005 ROOM=RIGHT_BUTTON
HAWKING_TO_CODEC_AIN7_N
HAWKING_TO_CODEC_AIN7_N_CONN
C4421 0.22UF 20% 6.3V X5R 01005 ROOM=RIGHT_BUTTON
HAWKING_TO_CODEC_AIN7_P
HAWKING_TO_CODEC_AIN7_C_P
CKPLUS_MAIVE=MISS_N_DIFFPAIR
FL4405 1500HM-25%-200MA-0.7DCR 01005 ROOM=RIGHT_BUTTON
HAWKING_TO_CODEC_AIN7_P_CONN
C4415 56PF 5% 25V NP0-C0G-CERM 01005 ROOM=RIGHT_BUTTON
NOSTUFF
C4422 180PF 10% 10V CERM 01005 ROOM=RIGHT_BUTTON
FL4406 1500HM-25%-200MA-0.7DCR 01005 ROOM=RIGHT_BUTTON
PP1V8_HAWKING
PP1V8_HAWKING_CONN
C4416 2.2UF 20% 6.3V X5R-CERM 0201-1 ROOM=RIGHT_BUTTON
C4414 220PF 10% 10V C0G-CERM 01005 ROOM=RIGHT_BUTTON
MIC2 (ANC REF)
FL4403 1500HM-25%-200MA-0.7DCR 01005 ROOM=RIGHT_BUTTON
PP_CODEC_TO_REARMIC2_BIAS
PP_CODEC_TO_REARMIC2_BIAS_CONN
C4403 220PF 5% 10V C0G-CERM 01005 ROOM=RIGHT_BUTTON
FL4401 1500HM-25%-200MA-0.7DCR 01005 ROOM=RIGHT_BUTTON
REARMIC2_TO_CODEC_AIN3_P
REARMIC2_TO_CODEC_AIN3_CONN_P
C4404 56PF 5% 25V NP0-C0G-CERM 01005 ROOM=RIGHT_BUTTON
FL4402 1500HM-25%-200MA-0.7DCR 01005 ROOM=RIGHT_BUTTON
REARMIC2_TO_CODEC_AIN3_N
REARMIC2_TO_CODEC_AIN3_CONN_N
C4405 56PF 5% 25V NP0-C0G-CERM 01005 ROOM=RIGHT_BUTTON
BUTTONS
R4402 100 5% 1/32W MF 01005 ROOM=RIGHT_BUTTON
BUTTON_POWER_KEY_L
BUTTON_POWER_KEY_CONN_L
C4401 27PF 5% 6.3V NP0-C0G 0201 ROOM=RIGHT_BUTTON
DZ4401 0201 6.5V-6.2PF ROOM=RIGHT_BUTTON
CHASSIS_GND_BS401
FL4407 120-OHM-0.220A 01005 ROOM=LEFT_BUTTON
BUTTON_RINGER_A
BUTTON_RINGER_A_CONN
C4418 27PF 5% 6.3V NP0-C0G 0201 ROOM=LEFT_BUTTON
DZ4402 0201 6.5V-6.2PF ROOM=LEFT_BUTTON
CHASSIS_GND_BS401
R4405 100 5% 1/32W MF 01005 ROOM=LEFT_BUTTON
BUTTON_VOL_DOWN_L
BUTTON_VOL_DOWN_CONN_L
C4419 100PF 5% 16V NP0-C0G 01005 ROOM=LEFT_BUTTON
DZ4403 12V-33PF 01005-1 ROOM=LEFT_BUTTON
CHASSIS_GND_BS401
R4406 100 5% 1/32W MF 01005 ROOM=LEFT_BUTTON
BUTTON_VOL_UP_L
BUTTON_VOL_UP_CONN_L
C4420 100PF 5% 16V NP0-C0G 01005 ROOM=LEFT_BUTTON
DZ4404 12V-33PF 01005-1 ROOM=LEFT_BUTTON
CHASSIS_GND_BS401

UTAH-D FLEX CONNECTOR

516S00152 RCPT (USED ON MLB) <-- THIS ONE
516S00151 PLUG

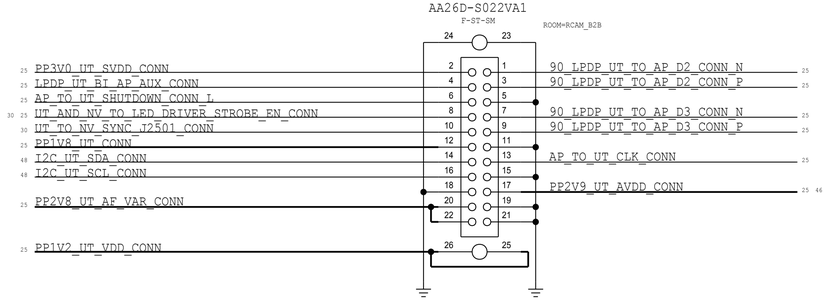

DISPLAY / TOUCH FLEX CONNECTOR

MLB: 516S00050

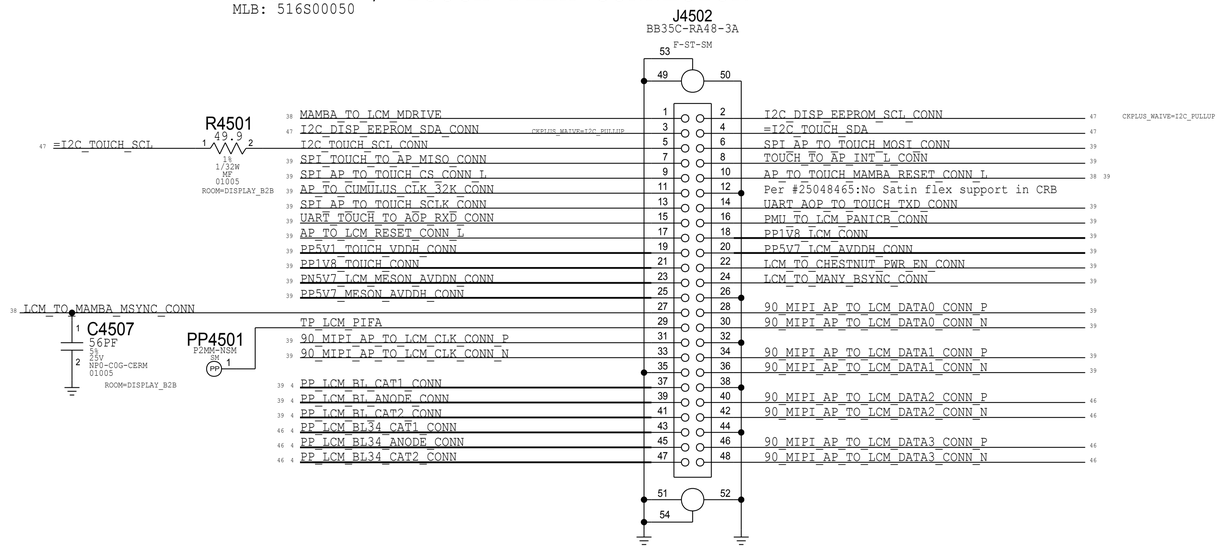

FOREHEAD FLEX CONNECTOR

MLB: 516S00146 (MCO REV 27)

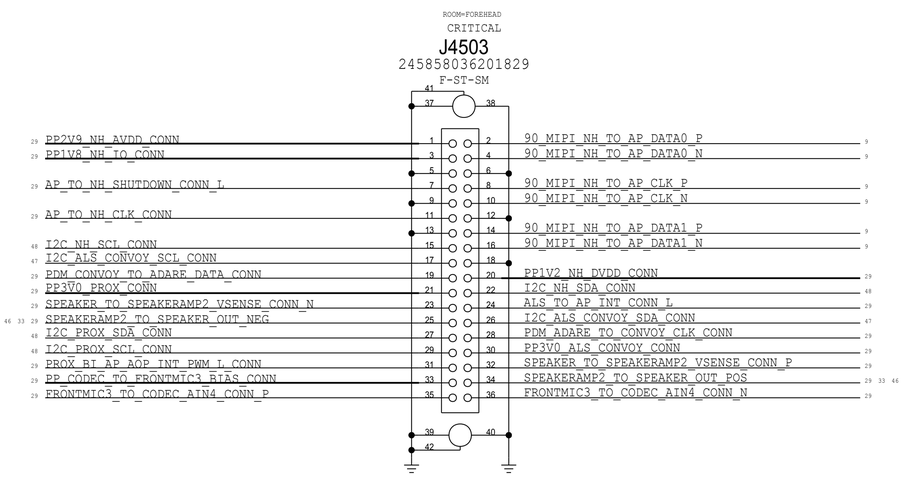

COMBO BUTTON FLEX CONNECTOR

APPLE APN: 516S00150 <-- THIS ONE ON MLB (matched MCO rev 27)
APPLE APN: 516S00149

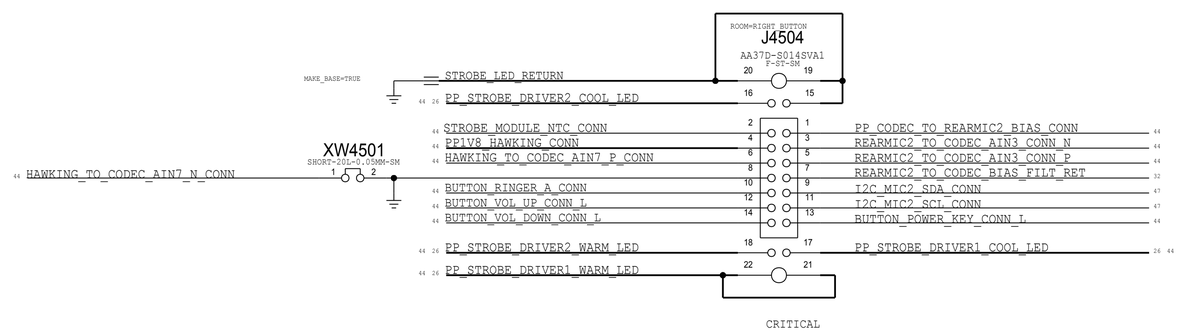

THIS PAGE UNIQUE TO LARGE FORM FACTOR

2ND BACKLIGHT DRIVER - 4LED

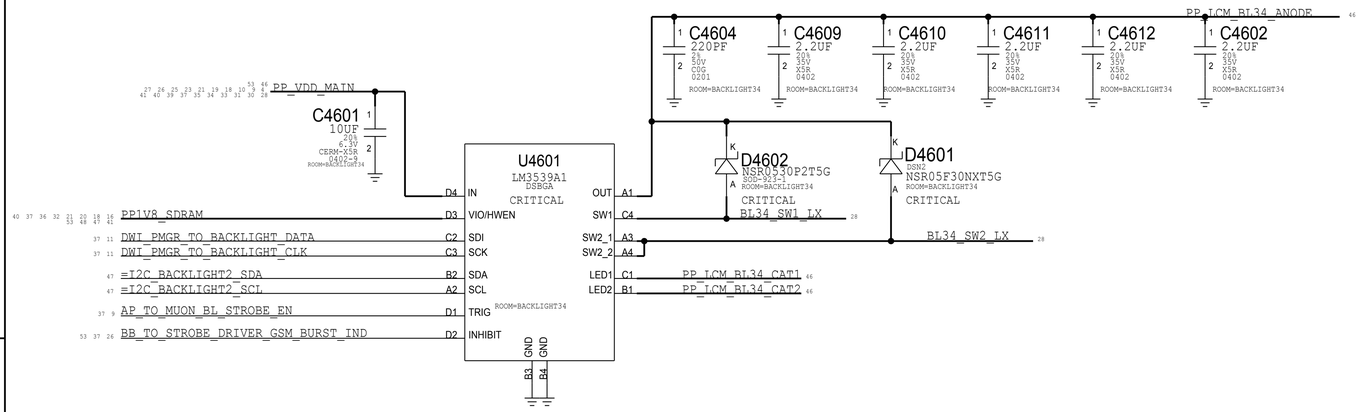

ISP I2C1

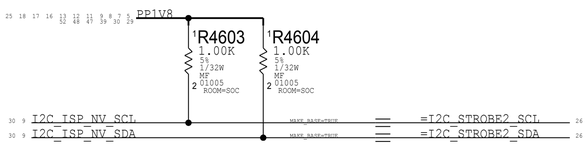

AC Coupling Caps

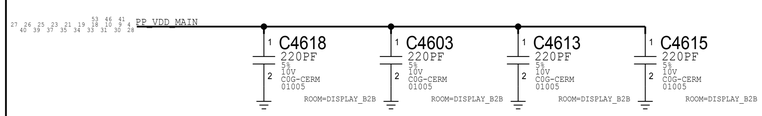

AC return path for LCM MIPI which is referenced to GND and VDD_MAIN

ACC Buck Caps

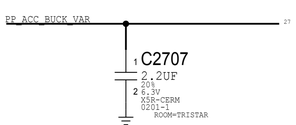

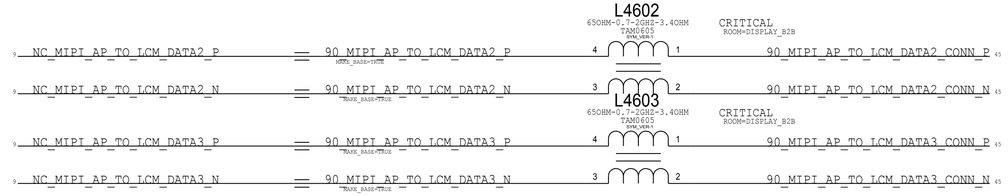

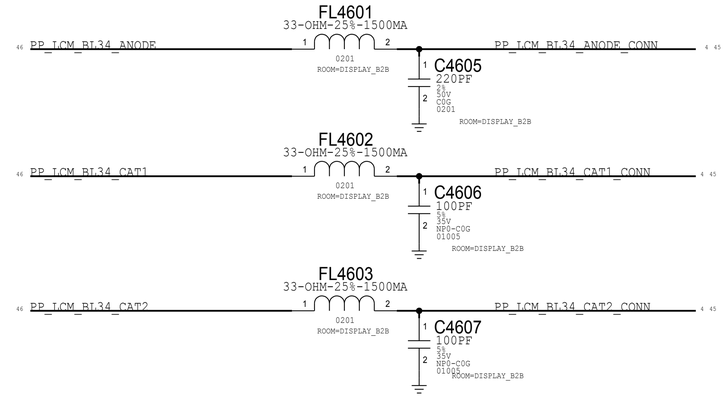

Dock B2B (Pg 41)

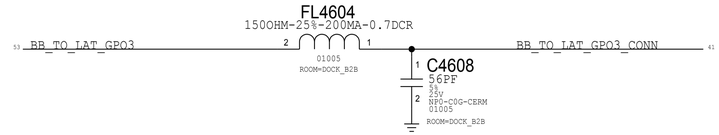

UT B2B

Extra RF GND

Top Speaker Compass Coil

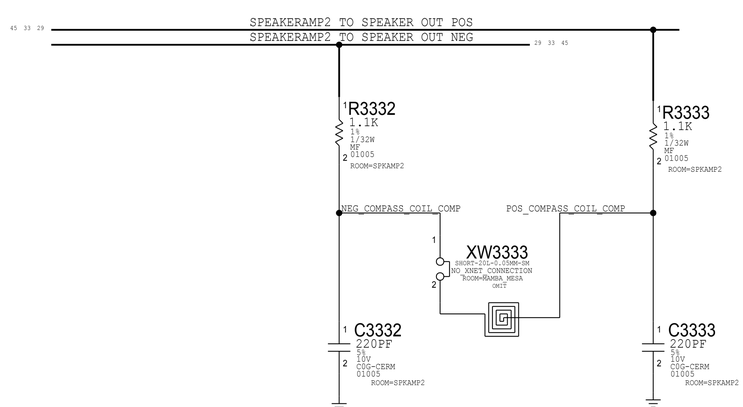

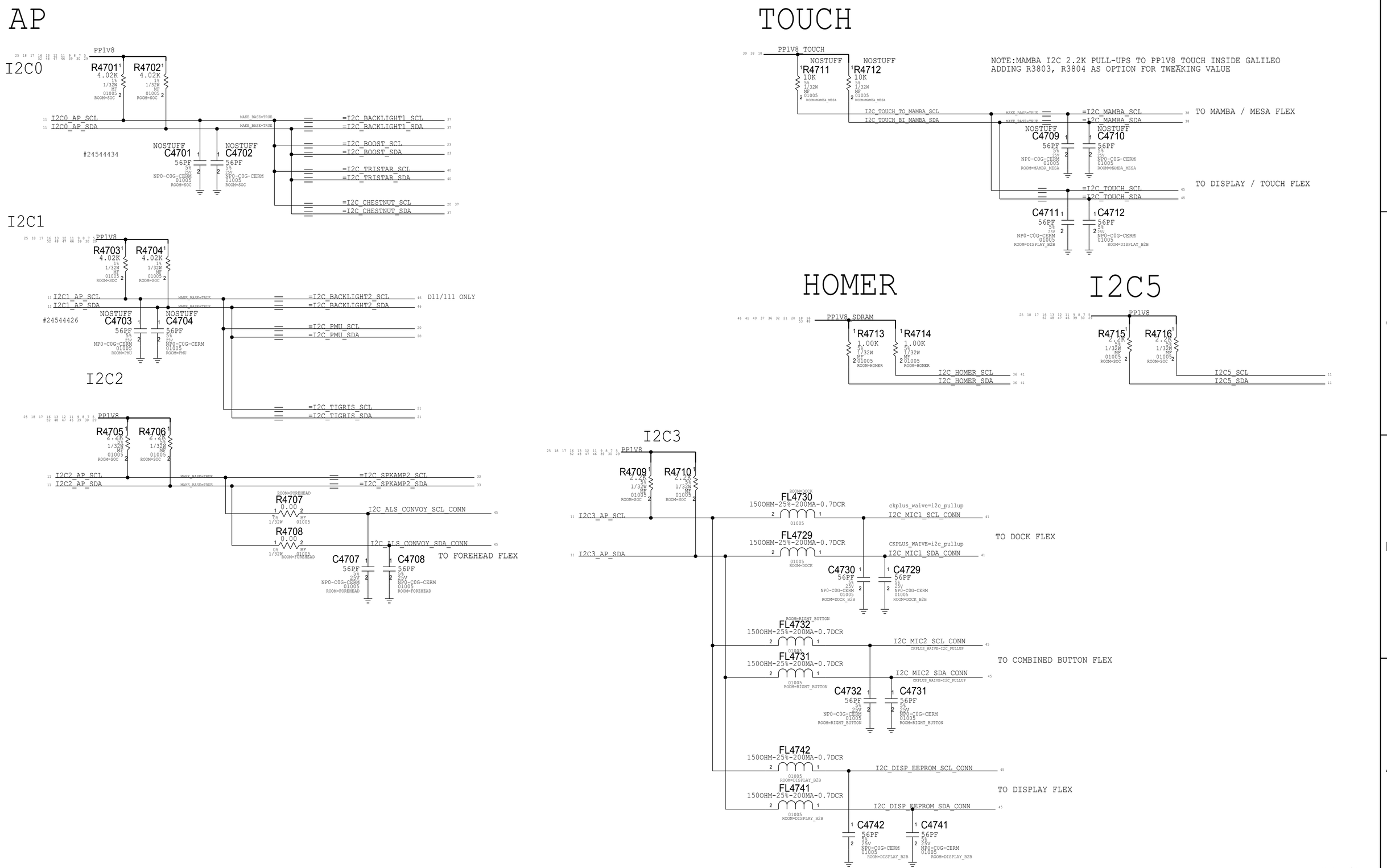
AP
I2C0
PP1V8
R4701 4.02K
R4702 4.02K
I2C0_AP_SCL
I2C0_AP_SDA
#24544434
NOSTUFF C4701 56PF
NOSTUFF C4702 56PF
=I2C_BACKLIGHT1_SCL
=I2C_BACKLIGHT1_SDA
=I2C_BOOST_SCL
=I2C_BOOST_SDA
=I2C_TRISTAR_SCL
=I2C_TRISTAR_SDA
=I2C_CHESTNUT_SCL
=I2C_CHESTNUT_SDA
I2C1
R4703 4.02K
R4704 4.02K
I2C1_AP_SCL
I2C1_AP_SDA
#24544426
NOSTUFF C4703 56PF
NOSTUFF C4704 56PF
=I2C_BACKLIGHT2_SCL
=I2C_BACKLIGHT2_SDA
D11/111 ONLY
=I2C_PMU_SCL
=I2C_PMU_SDA
I2C2
R4705 2.2K
R4706 2.2K
I2C2_AP_SCL
I2C2_AP_SDA
=I2C_TIGRIS_SCL
=I2C_TIGRIS_SDA
=I2C_SPKAMP2_SCL
=I2C_SPKAMP2_SDA
R4707 0.00
R4708 0.00
I2C_ALS_CONVOY_SCL_CONN
I2C_ALS_CONVOY_SDA_CONN
C4707 56PF
C4708 56PF
TO FOREHEAD FLEX
TOUCH
PP1V8_TOUCH
NOSTUFF R4711 10K
NOSTUFF R4712 10K
NOTE:MAMBA I2C 2.2K PULL-UPS TO PP1V8_TOUCH INSIDE GALILEO
ADDING R3803, R3804 AS OPTION FOR TWEAKING VALUE
I2C_TOUCH_TO_MAMBA_SCL
I2C_TOUCH_BI_MAMBA_SDA
=I2C_MAMBA_SCL
=I2C_MAMBA_SDA
TO MAMBA / MESA FLEX
NOSTUFF C4709 56PF
NOSTUFF C4710 56PF
=I2C_TOUCH_SCL
=I2C_TOUCH_SDA
TO DISPLAY / TOUCH FLEX
C4711 56PF
C4712 56PF
HOMER
PP1V8_SDRAM
R4713 1.00K
R4714 1.00K
I2C_HOMER_SCL
I2C_HOMER_SDA
I2C5
PP1V8
R4715 2.2K
R4716 2.2K
I2C5_SCL
I2C5_SDA
I2C3
PP1V8
R4709 2.2K
R4710 2.2K
I2C3_AP_SCL
I2C3_AP_SDA
FL4730 1500HM-25%-200MA-0.7DCR
FL4729 1500HM-25%-200MA-0.7DCR
ckplus_waive=i2c_pullup
I2C_MIC1_SCL_CONN
CKPLUS_WAIVE=i2c_pullup
I2C_MIC1_SDA_CONN
TO DOCK FLEX
C4730 56PF
C4729 56PF
FL4732 1500HM-25%-200MA-0.7DCR
FL4731 1500HM-25%-200MA-0.7DCR
I2C_MIC2_SCL_CONN
I2C_MIC2_SDA_CONN
TO COMBINED BUTTON FLEX
C4732 56PF
C4731 56PF
FL4742 1500HM-25%-200MA-0.7DCR
FL4741 1500HM-25%-200MA-0.7DCR
I2C_DISP_EEPROM_SCL_CONN
I2C_DISP_EEPROM_SDA_CONN
TO DISPLAY FLEX
C4742 56PF
C4741 56PF

AOP

I2C

PP1V8_SDRAM

R4801 2.2K 5% 1/32W MF 01005

R4802 2.2K 5% 1/32W MF 01005

C4807 0.1UF 20% 6.3V X5R-CERM 01005 ROOM=SOC

U4802 MAX20312 WLP ROOM=SOC

VCC B1 · IOVCC1 A2 · IOVCC2 B2 · GND A1

#24544699: Support 1MHz

I2C_AOP_SCL · I2C_AOP_SDA

=I2C_SPKAMP1_SCL · =I2C_SPKAMP1_SDA

=I2C_ARC1_SCL · =I2C_ARC1_SDA

FL4815 1500OHM-25%-200MA-0.7DCR 01005 ROOM=FOREHEAD

TO FCAM FLEX

I2C_PROX_SCL_CONN CKPLUS_WAIVE=I2C_PULLUP

I2C_PROX_SDA_CONN CKPLUS_WAIVE=I2C_PULLUP

#24958320:Intentional R4815 Change
Reduce undershoot when Prox Driving

R4815 33.2 1% 1/32W MF 01005 ROOM=FOREHEAD

C4803 56PF 5% 25V NPO-C0G-CERM 01005 ROOM=FOREHEAD

C4804 56PF 5% 25V NPO-C0G-CERM 01005 ROOM=FOREHEAD

Intentional R4815 Change

PP1V8_MESA

R4803 4.7K 1% 1/32W MF 01005 ROOM=MAMBA_MESA

R4804 4.7K 1% 1/32W MF 01005 ROOM=MAMBA_MESA

PP1V8_SDRAM

U4805 74LVC1G3157GX X2SON6 · VCC · S · Z · GND · Y0 · Y1 · NC

I2C_AOP_SCL_ISO

R4806 0.00 0% 1/32W MF 01005 ROOM=MAMBA_MESA

I2C_MESA_TURTLE_SCL_CONN

C4809 56PF 5% 25V NPO-C0G-CERM 01005 ROOM=MAMBA_MESA

TO MAMBA/MESA FLEX

AOP_TO_MESA_I2C_ISO_EN

R4805 511K 1% 1/32W MF 01005

PP1V8_SDRAM

U4806 74LVC1G3157GX X2SON6 · VCC · S · Z · GND · Y0 · Y1 · NC

I2C_AOP_SDA_ISO

R4807 0.00 0% 1/32W MF 01005 ROOM=MAMBA_MESA

I2C_MESA_TURTLE_SDA_CONN

C4810 56PF 5% 25V NPO-C0G-CERM 01005 ROOM=MAMBA_MESA

ISP

I2C0

PP1V8

#24550735: ISP I2C0 PU

R4808 1.00K 5% 1/32W MF 01005 ROOM=SOC

R4809 1.00K 5% 1/32W MF 01005 ROOM=SOC

I2C_ISP_UT_SCL · I2C_ISP_UT_SDA

=I2C_STROBE1_SCL · =I2C_STROBE1_SDA

I2C1

See page 46

R4816 0.00 0% 1/32W MF 01005 ROOM=RCAM_B2B

C4817 56PF 5% 25V NPO-C0G-CERM 01005 ROOM=RCAM_B2B

I2C_UT_SCL_CONN CKPLUS_WAIVE=I2C_PULLUP

R4817 0.00 0% 1/32W MF 01005 ROOM=RCAM_B2B

C4816 56PF 5% 25V NPO-C0G-CERM 01005 ROOM=RCAM_B2B

I2C_UT_SDA_CONN CKPLUS_WAIVE=I2C_PULLUP

I2C2

PP1V8

R4810 2.2K 5% 1/32W MF 01005 ROOM=SOC

R4811 2.2K 5% 1/32W MF 01005 ROOM=SOC

I2C_ISP_NH_SCL · I2C_ISP_NH_SDA

R4812 0.00 0% 1/32W MF 01005 ROOM=FOREHEAD

C4812 56PF 5% 25V NPO-C0G-CERM 01005 ROOM=FOREHEAD

I2C_NH_SCL_CONN CKPLUS_WAIVE=I2C_PULLUP

R4813 0.00 0% 1/32W MF 01005 ROOM=FOREHEAD

C4813 56PF 5% 25V NPO-C0G-CERM 01005 ROOM=FOREHEAD

I2C_NH_SDA_CONN CKPLUS_WAIVE=I2C_PULLUP

D1x I2C Table

Bus	Device	Binary	7-bit Address	8-bit Address	Max Speed
ISP I2C0 *1MHz*	SALT LAKE (PRIMARY)	0010000X	0x10	0x20	1 MHz
	SALT LAKE (SECONDARY)	0110000X	0x30	0x60	1 MHz
	GRUNBERG (STANDARD)	0011100X	0x1C	0x38	1 MHz
	GRUNBERG (SPECIAL ABSOLUTE R/W)	0011101X	0x1D	0x3A	1 MHz
	GRUNBERG (SPECIAL DELTA READ)	0011110X	0x1E	0x3C	1 MHz
	STROBE 1	1100011X	0x63	0xC6	1 MHz
ISP I2C1 *1MHz*	LAS VEGAS (PRIMARY)	0100000X	0x20	0x40	1 MHz
	LAS VEGAS (SECONDARY)	0110000X	0x30	0x60	1 MHz
	EDWIN	1100011X	0x63	0xC6	400 kHz
	STROBE 2	0000110X	0x06	0x0C	1 MHz
ISP I2C2 *400kHz*	CONCORD	0010000X	0x10	0x20	1 MHz
AOP I2C *1MHz*	ARC DRIVER 1	100000YX	0x41	0x82	1 MHz
	PROX	1011000X	0x58	0xB0	1 MHz
	SPKAMP1 (L26)	100000YX	0x40	0x80	1 MHz
	TURTLE	0101100X	0x2c	0x58	400 kHz
	MESA	1100001X	0x61	0xC2	400 kHz
Touch I2C *600kHz*	MAMBA	1100000X	0x60	0xC0	1 MHz
	MESON	1000000X	0x40	0x80	510 kHz
EEPROM I2C	EEPROM	1010001X	0x51	0xA2	400 kHz
AP I2C0 *400kHz*	BOOST	1110101X	0x75	0xEA	3.4 MHz
	TRISTAR	0011010X	0x1A	0x34	400 kHz
	BACKLIGHT 1	1100010X	0x62	0xC4	1 MHz
	CHESTNUT	0100111X	0x27	0x4E	400 kHz
AP I2C1 *400kHz*	ADELYN	1110100X	0x74	0xE8	400 kHz
	TIGRIS	1110101X	0x75	0xEA	400 kHz
	BACKLIGHT 2	1100010X	0x62	0xC4	1 MHz
AP I2C2 *400kHz*	ALS	0101001X	0x29	0x52	400 kHz
	CONVOY	0100001X	0x21	0x42	3.4 MHz
		0100010X	0x22	0x44	400 kHz
	SPKAMP 2 (L26)	10000ZYX	0x40	0x80	400 MHz
AP I2C3 *100kHz*	DOCK FLEX (MIC1)	1010100X	0x54	0xA8	1 MHz
	COMBINED BUTTON FLEX (MIC2)	1010100X	0x56	0xAC	1 MHz
	DISP EEPROM	1010001X	0x51	0xA2	400kHz
Homer I2C *1MHz*	SCHRODINGER (STANDARD)	0001110X	0xE	0x1C	1 MHz
	SCHRODINGER (CAL REG'S)	0001111X	0xF	0x1D	1 MHz
	EEPROM (STANDARD)	1010000X	0x50	0xA0	
	EEPROM (CONFIG)	1010000X	0x50	0xA0	

8 7 6 5 4 3 2 1

D

C

B

A

8 7 6 5 4 3 2 1

8 7 6 5 4 3 2 1

D

C

B

A

8 7 6 5 4 3 2 1

This page controls elements different accross all MLBs

PCIe Lanes

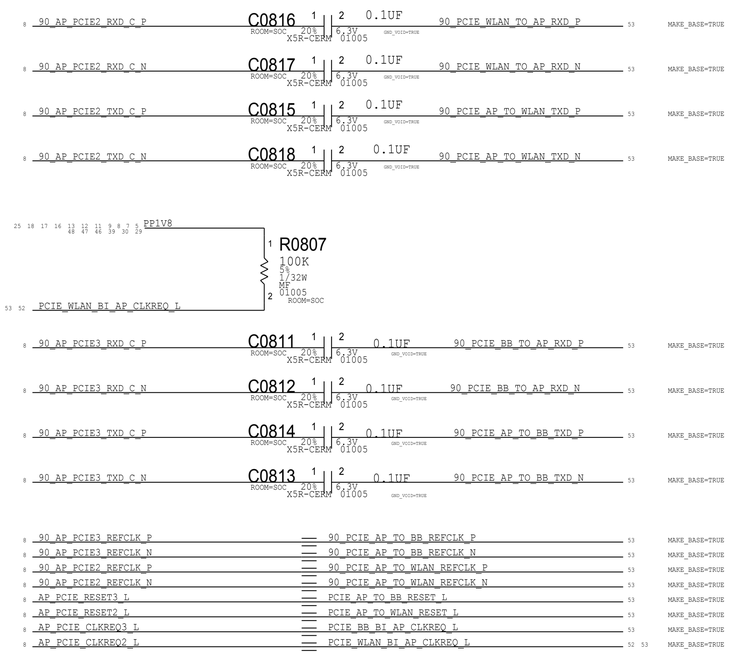

Wifi/BT

I306

WIFI_MLB

PP_VDD_MAIN	PP_VDD_MAIN	
PP1V8_SDRAM	PP1V8_SDRAM	
PMUGPIO_TO_WLAN_CLK32K	PMU_TO_WLAN_32K	
PMU_TO_WLAN_REG_ON	PMU_TO_WLAN_REG_ON	
PMU_TO_BT_REG_ON	PMU_TO_BT_REG_ON	
BT_TO_PMU_HOST_WAKE	BT_TO_PMU_HOST_WAKE	
AP_TO_BT_WAKE	AP_TO_BT_WAKE	
90_PCIE_AP_TO_WLAN_REFCLK_P	100_PCIE_AP_TO_WLAN_REFCLK_P	
90_PCIE_AP_TO_WLAN_REFCLK_N	100_PCIE_AP_TO_WLAN_REFCLK_N	
90_PCIE_AP_TO_WLAN_TXD_P	100_PCIE_AP_TO_WLAN_TX_P	
90_PCIE_AP_TO_WLAN_TXD_N	100_PCIE_AP_TO_WLAN_TX_N	
90_PCIE_WLAN_TO_AP_RXD_P	100_PCIE_WLAN_TO_AP_RX_P	
90_PCIE_WLAN_TO_AP_RXD_N	100_PCIE_WLAN_TO_AP_RX_N	
PCIE_AP_TO_WLAN_PERST_L	PCIE_AP_TO_WLAN_PERST_L	
PCIE_WLAN_BI_AP_CLKREQ_L	PCIE_AP_BI_WLAN_CLKREQ_L	
WLAN_TO_PMU_HOST_WAKE	PCIE_WLAN_TO_PMU_WAKE	
AP_TO_WLAN_DEVICE_WAKE	AP_TO_WLAN_DEV_WAKE	
UART_AP_TO_WLAN_TXD	UART_AP_TO_WLAN_TXD	
UART_WLAN_TO_AP_RXD	UART_WLAN_TO_AP_RXD	
UART_AP_TO_WLAN_RTS_L	UART_AP_TO_WLAN_RTS_L	
UART_WLAN_TO_AP_CTS_L	UART_WLAN_TO_AP_CTS_L	
UART_AP_TO_BT_TXD	UART_AP_TO_BT_TXD	
UART_BT_TO_AP_RXD	UART_BT_TO_AP_RXD	
UART_AP_TO_BT_RTS_L	UART_AP_TO_BT_RTS_L	
UART_BT_TO_AP_CTS_L	UART_BT_TO_AP_CTS_L	
AOP_TO_WLAN_CONTEXT_A	AOP_TO_WLAN_CONTEXT_A	
AOP_TO_WLAN_CONTEXT_B	AOP_TO_WLAN_CONTEXT_B	
I2S_AP_TO_BT_BCLK	I2S_AP_TO_BT_BCLK	
I2S_AP_TO_BT_LRCLK	I2S_AP_TO_BT_LRCK	
I2S_BT_TO_AP_DIN	I2S_BT_TO_AP_DIN	
I2S_AP_TO_BT_DOUT	I2S_AP_TO_BT_DOUT	
UART_BB_TO_WLAN_COEX	UART_BB_TO_WLAN_COEX	
UART_WLAN_TO_BB_COEX	UART_WLAN_TO_BB_COEX	
50_UAT_WLAN_5G_WEST	50_UAT_WLAN_5G_WEST	
50_UAT_WLAN_2G_EAST	50_UAT_WLAN_2G_EAST	
50_UAT_WLAN_5G_EAST	50_UAT_WLAN_5G_EAST	
50_WLAN_G_1	50_WLAN_G_1	
50_WLAN_A_1	50_WLAN_A_1	
50_UAT2_M	50_UAT2_M	

Cellular

Aliases used to correct name for Karoo radio system

RADIO_MLB

PP_VDD_MAIN	PP_VDD_MAIN	
PP1V8_SDRAM	PP1V8_SDRAM	
BBPMU_TO_PMU_AMUX1	BBPMU_TO_PMU_AMUX1	
BBPMU_TO_PMU_AMUX2	BBPMU_TO_PMU_AMUX2	
BBPMU_TO_PMU_AMUX3	BBPMU_TO_PMU_AMUX3	
Opposite polarity on Eureka --v		
AP_TO_BBPMU_RADIO_ON_L	AP_TO_BBPMU_SDWN_L	MAKE_BASE=TRUE
PMU_TO_BBPMU_RESET_L	PMU_TO_BBPMU_ON	MAKE_BASE=TRUE
Eureka names		
	AP_TO_BB_RESET_L	
NC_BB_TO_AP_RESET_ACT_L	BB_TO_AP_RESET_ACT_L	MAKE_BASE=TRUE
	BB_TO_AP_RESET_DETECT_L	
	BB_TO_STROBE_DRIVER_GSM_BURST_IND	
	AP_TO_BB_MESA_ON	
	AP_TO_BB_TIME_MARK	
	AP_TO_BB_COREDUMP	
	AP_TO_BB_IPC_GPIO1	
NC_AP_TO_BB_IPC_GPIO2	AP_TO_BB_IPC_GPIO2	MAKE_BASE=TRUE
	90_PCIE_AP_TO_BB_REFCLK_P	
	90_PCIE_AP_TO_BB_REFCLK_N	
	90_PCIE_AP_TO_BB_TXD_P	
	90_PCIE_AP_TO_BB_TXD_N	
	90_PCIE_BB_TO_AP_RXD_P	
	90_PCIE_BB_TO_AP_RXD_N	
	PCIE_AP_TO_BB_RESET_L	
	PCIE_BB_BI_AP_CLKREQ_L	
	BB_TO_PMU_PCIE_HOST_WAKE_L	
		NC
		NC
	UART_AOP_TO_BB_TXD	
	UART_BB_TO_AOP_RXD	
	I2S_BB_TO_AP_BCLK	
	I2S_BB_TO_AP_LRCLK	
	I2S_AP_TO_BB_DOUT	
	I2S_BB_TO_AP_DIN	
	UART_BB_TO_WLAN_COEX	
	UART_WLAN_TO_BB_COEX	
	SIM1_SWP	
	NFC_TO_BB_CLK_REQ	
	BB_TO_NFC_CLK	
NC_PMU_TO_GNSS_EN	PMU_TO_GNSS_EN	MAKE_BASE=TRUE
NC_AP_UART2_TXD	UART_AP_TO_GNSS_TXD	MAKE_BASE=TRUE
NC_AP_UART2_RXD	UART_GNSS_TO_AP_RXD	MAKE_BASE=TRUE
NC_AP_UART2_RTS_L	UART_AP_TO_GNSS_RTS_L	MAKE_BASE=TRUE
NC_AP_UART2_CTS_L	UART_GNSS_TO_AP_CTS_L	MAKE_BASE=TRUE
NC_GNSS_TO_PMU_HOST_WAKE	GNSS_TO_PMU_HOST_WAKE	MAKE_BASE=TRUE
NC_AP_TO_GNSS_TIME_MARK	AP_TO_GNSS_TIME_MARK	MAKE_BASE=TRUE
NC_AP_TO_GNSS_WAKE	AP_TO_GNSS_WAKE	MAKE_BASE=TRUE
	SWD_AP_TO_MANY_SWCLK	
	SWD_AOP_BI_BB_SWDIO	
	PMU_TO_BB_USB_VBUS_DETECT	
	90_USB_BB_DATA_P	
	90_USB_BB_DATA_N	

1. ALL RESISTANCE VALUES ARE IN OHMS, 0.1 WATT +/- 5%.
2. ALL CAPACITANCE VALUES ARE IN MICROFARADS.
3. ALL CRYSTALS & OSCILLATOR VALUES ARE IN HERTZ.

REV	ECN	DESCRIPTION OF REVISION	CK APPD / DATE
5	0006232160	ENGINEERING RELEASED	2016-05-16

ICE16 RADIO_MLB

Mon May 16 14:17:24 2016

PDF PAGE	CSA PAGE	CONTENTS
2	55	BASEBAND
3	56	BASEBAND MEMORY/DEBUG
4	57	BASEBAND POWER
5	58	BASEBAND PMIC
6	59	TRANSCEIVERS
7	60	ET MODULATOR
8	61	TDD TRANSMIT
9	62	FDD TRANSMIT
10	63	PRIMARY RECEIVE
11	64	LOWER ANTENNA & COUPLERS
12	65	DIVERSITY RECEIVE ASM'S
13	66	DIVERSITY RECEIVE LNA'S
14	67	UPPER ANTENNA FEEDS
15	68	GNSS
16	69	TEST POINTS & SIM

ALTERNATES

PART NUMBER	ALTERNATE FOR PART NUMBER	REFERENCE DESIGNATOR(S)	DESCRIPTION	BOM OPTION
197S00040	197S00044	VTCXO_RF	AVX VC-TCXO	?
197S00042	197S00044	VTCXO_RF	NDK VC-TCXO	?
197S00039	197S00043	GTCXO_RF	AVX VC-TCXO	?
197S00041	197S00043	GTCXO_RF	NDK VC-TCXO	?
335S00013	335S0894	EPROM_RF	ON SEMI EEPROM	?
138S0719	138S1103	C5820_RF	MURATA	?
138S0706	138S0739	C5811_RF, C5813_RF, C5815_RF, C5905_RF, C5913_RF	MURATA	?
138S0945	138S0739	C5811_RF, C5813_RF, C5815_RF, C5905_RF, C5913_RF	KYOCERA	?

BOM OPTIONS

PART#	QTY	DESCRIPTION	REFERENCE DESIGNATOR(S)	BOM OPTION
998-03730	1	BASEBAND, UNFUSED	BB_RF	BB_UNFUSED
998-03731	1	BASEBAND, LOCAL FUSED	BB_RF	BB_LOCAL_FUSED
998-03732	1	BASEBAND, DEV FUSED	BB_RF	BB_DEV_FUSED
337S00127	1	BASEBAND, PRODUCTION FUSED	BB_RF	BB_PROD_FUSED

SCH: 951-00673
BOM: 939-00555

RADIO_MLB PORTS

POWER

69	68 61 60 59 58 53	IN	PP_VDD_MAIN
69	68 64 59 58 57 56 55 53	IN	PP1V8_SDRAM

AMUX

58	53	OUT	BBPMU_TO_PMU_AMUX1
58	53	OUT	BBPMU_TO_PMU_AMUX2
58	53	OUT	BBPMU_TO_PMU_AMUX3

BB CONTROL

			AP_TO_BBPMU_RADIO_ON_L
			PMU_TO_BBPMU_RESET_L
69	56 53	IN	AP_TO_BB_RESET_L
	56 53	OUT	BB_TO_AP_RESET_ACT_L
	55 53	OUT	BB_TO_AP_RESET_DETECT_L
69	55 53	OUT	BB_TO_AP_GSM_TXBURST
69	55 53	IN	AP_TO_BB_MESA_ON
69	55 53	IN	AP_TO_BB_TIME_MARK
	55 53	IN	AP_TO_BB_COREDUMP_TRIG
			TOUCH_TO_BBPMU_FORCE_PWM
	55 53	IN	AP_TO_BB_IPC_GPIO
	55 53	IN	AP_TO_BB_IPC_GPIO2

		OUT	AP_TO_BBPMU_SDWN_L 53 55 58 69
		OUT	PMU_TO_BBPMU_ON 53 58 69

PCIE

	55 53	IN	100_PCIE_AP_TO_BB_REFCLK_P
	55 53	IN	100_PCIE_AP_TO_BB_REFCLK_N
69	55 53	IN	100_PCIE_AP_TO_BB_TX_P
69	55 53	IN	100_PCIE_AP_TO_BB_TX_N
	55 53	OUT	100_PCIE_BB_TO_AP_RX_P
69	55 53	OUT	100_PCIE_BB_TO_AP_RX_N
69	55 53	IN	PCIE_AP_TO_BB_PERST_L
	16 2	IO	PCIE_AP_BI_BB_CLKREQ_L
69	55 53	OUT	PCIE_BB_TO_PMU_WAKE_L
			AP_TO_BB_DEVICE_WAKE

UART

69	55	IN	UART_AP_TO_BB_TXD
69	53	OUT	UART_BB_TO_AP_RXD

AOP

	55 53	IN	UART_AOP_TO_BB_TXD
	55 53	OUT	UART_BB_TO_AOP_RXD

AUDIO

	55 53	IN	I2S_AP_TO_BB_BCLK
	55 53	IN	I2S_AP_TO_BB_LRCLK
	55 53	IN	I2S_AP_TO_BB_DOUT
	55 53	OUT	I2S_BB_TO_AP_DIN

WLAN

69	55 53	IN	UART_BB_TO_WLAN_COEX
69	55 53	OUT	UART_WLAN_TO_BB_COEX

NFC

	14	IO	SIM1_SWP
			SIM2_SWP
	59 53	IN	NFC_TO_BB_CLKREQ
	59 53	OUT	BB_TO_NFC_CLK

GNSS

69	68 53	IN	PMU_TO_GNSS_EN
69	68 53	IN	UART_AP_TO_GNSS_TXD
69	68 53	OUT	UART_GNSS_TO_AP_RXD
69	68 53	IN	UART_AP_TO_GNSS_RTS_L
69	68 53	OUT	UART_GNSS_TO_AP_CTS_L
69	68 53	OUT	GNSS_TO_PMU_HOST_WAKE
69	68 53	IN	AP_TO_GNSS_TIME_MARK
	68 53	IN	AP_TO_GNSS_DEVICE_WAKE

DEBUG

	56 53	IN	SWD_AP_TO_BB_CLK
	2	IO	SWD_AP_BI_BB_IO
69	55 53	IN	USB_BB_VBUS
	16 2	IO	90_USB_BB_P
	16 2	IO	90_USB_BB_N

64	53	OUT	LAT_TUNER_GPO1
64	53	OUT	LAT_TUNER_GPO2
64	53	OUT	LAT_TUNER_GPO3

ANTENNA

	14	IO	50_UAT_WLAN_2G_WEST
	13	IO	50_UAT_LB_NORTH
	11	IO	50_UAT_LB_SOUTH
	11	IO	50_UAT_MB_HB_SOUTH
	13	IO	50_UAT_MB_HB_WEST
	14	IO	50_UAT1_TUNER

TUNER

		OUT	LAT_TUNER_RFFE_CLK	RFFE1_CLK_FILT 11 12
		IO	LAT_TUNER_RFFE_DATA	RFFE1_DATA_FILT 11 12
	64 53	OUT	UAT_TUNER_GPO	
	66 53	OUT	UAT_TUNER_RFFE_CLK	
	13	IO	UAT_TUNER_RFFE_DATA	

CONFIDENTIAL AND PROPRIETARY APPLE SYSTEM DESIGN. FOR REFERENCE PURPOSE ONLY - NOT A CHANGE REQUEST

BASEBAND

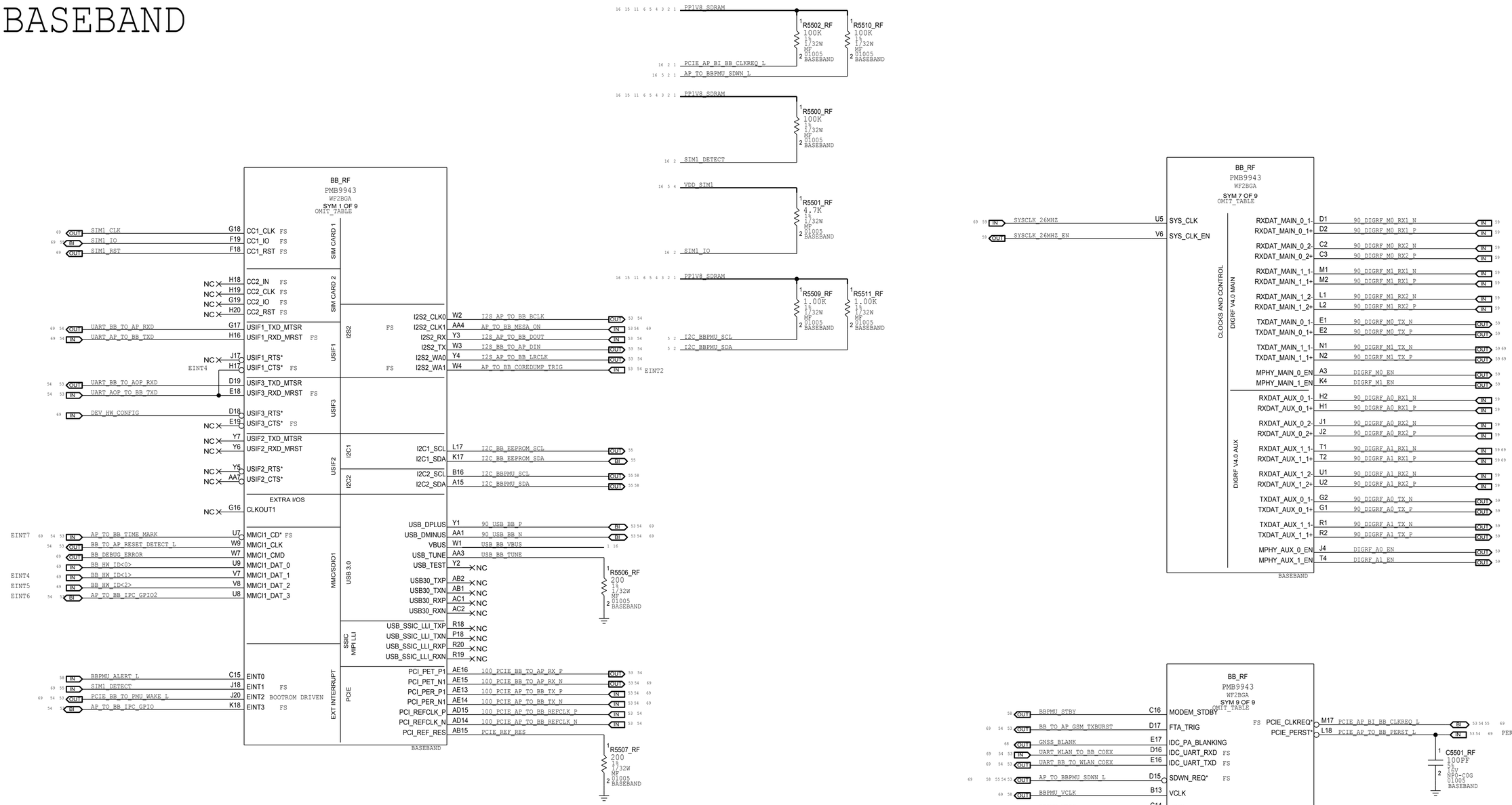

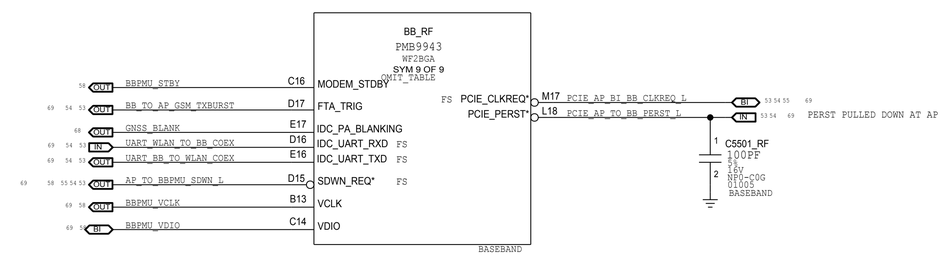

BB EEPROM

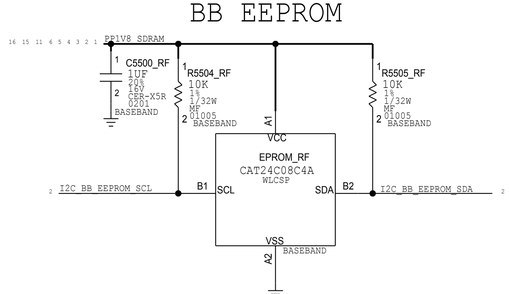

CONFIDENTIAL AND PROPRIETARY APPLE SYSTEM DESIGN. FOR REFERENCE PURPOSE ONLY - NOT A CHANGE REQUEST

BASEBAND MEMORY/DEBUG

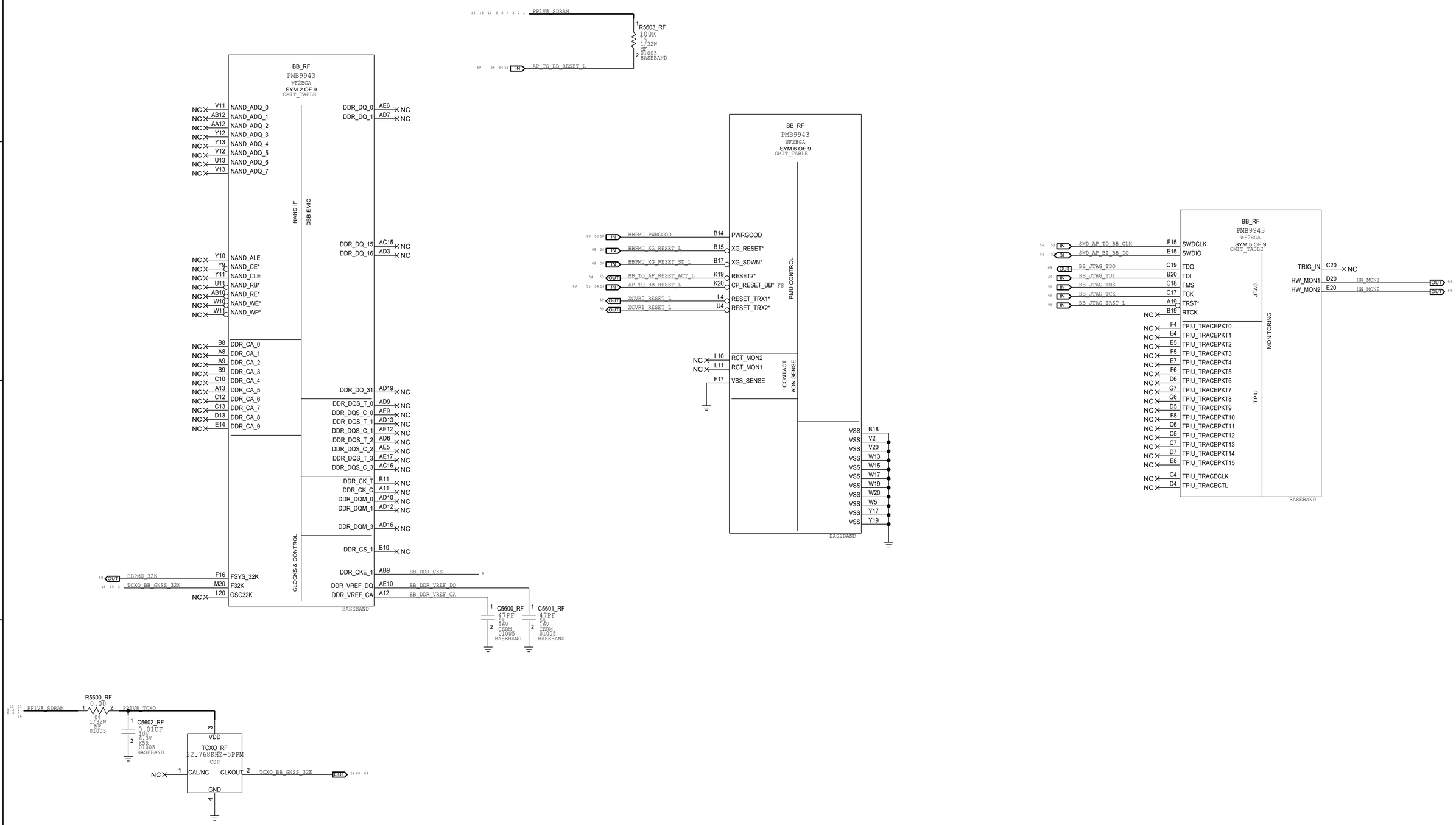

CONFIDENTIAL AND PROPRIETARY APPLE SYSTEM DESIGN. FOR REFERENCE PURPOSE ONLY - NOT A CHANGE REQUEST

BASEBAND POWER

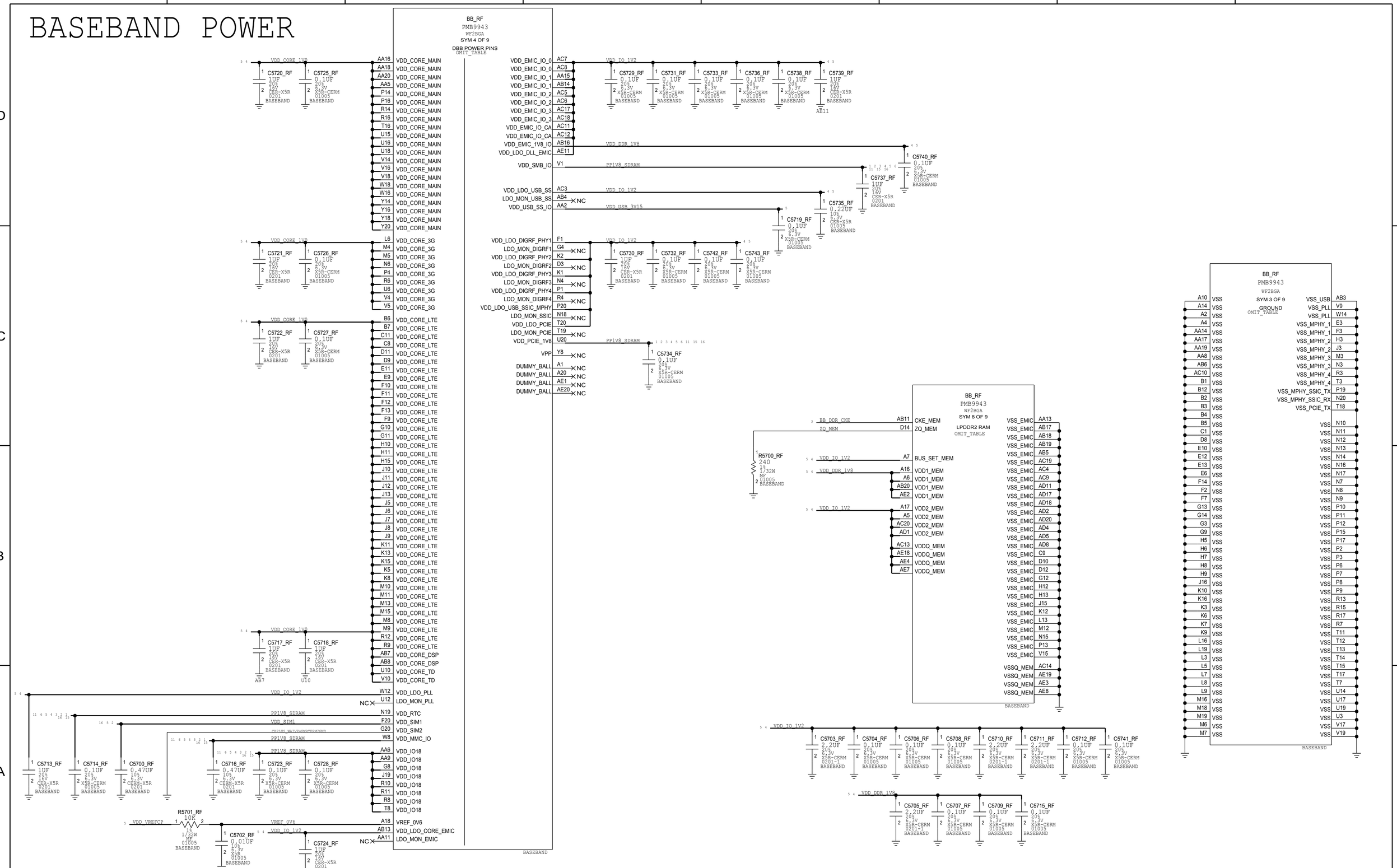

BASEBAND PMIC

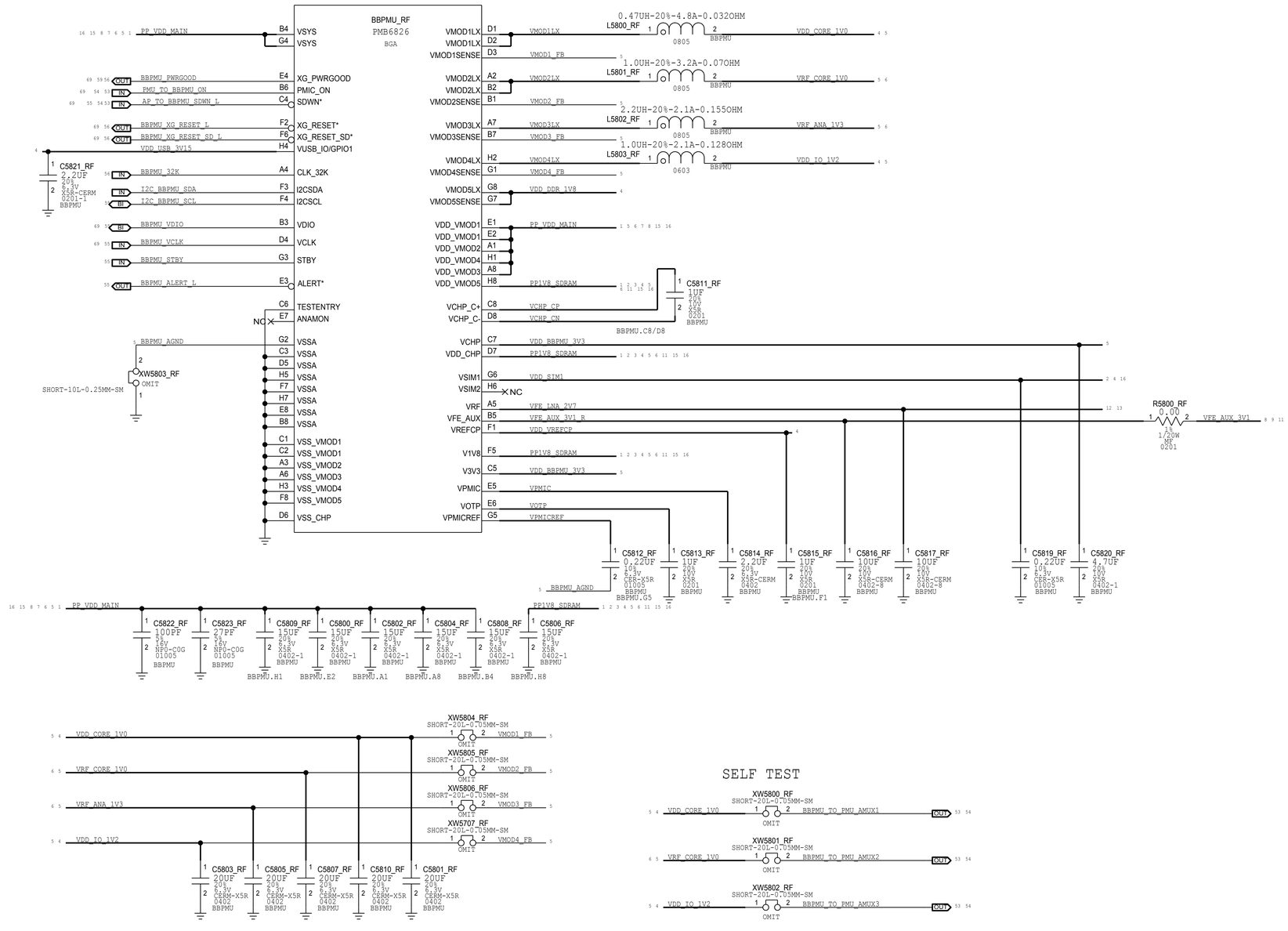

CONFIDENTIAL AND PROPRIETARY APPLE SYSTEM DESIGN. FOR REFERENCE PURPOSE ONLY - NOT A CHANGE REQUEST

TRANSCEIVERS

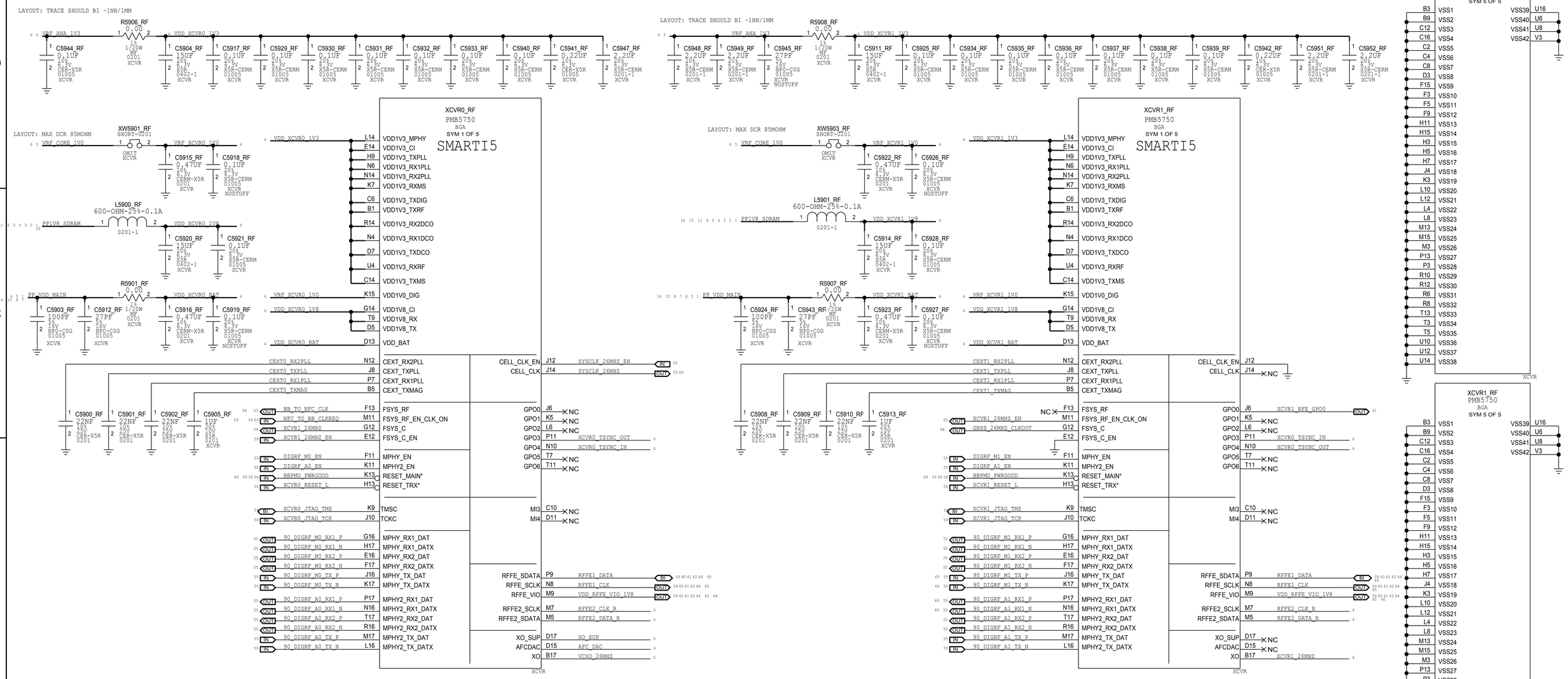

VCTCXO

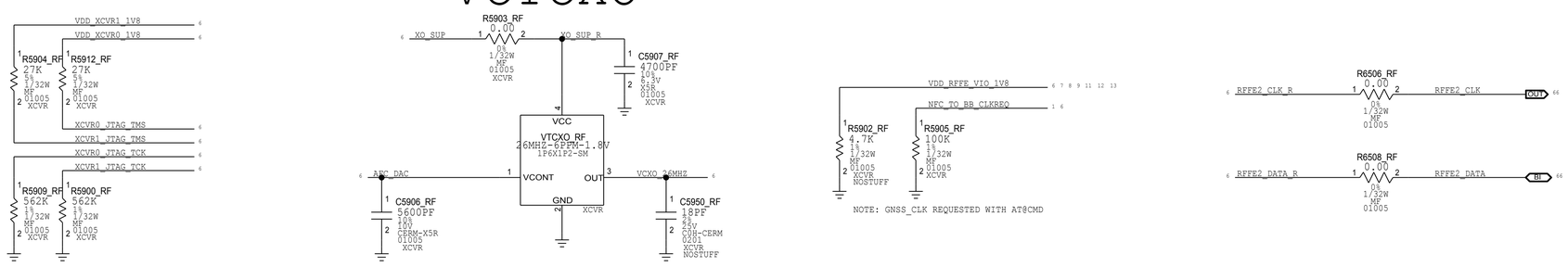

ET MODULATOR

ALPES II ES2

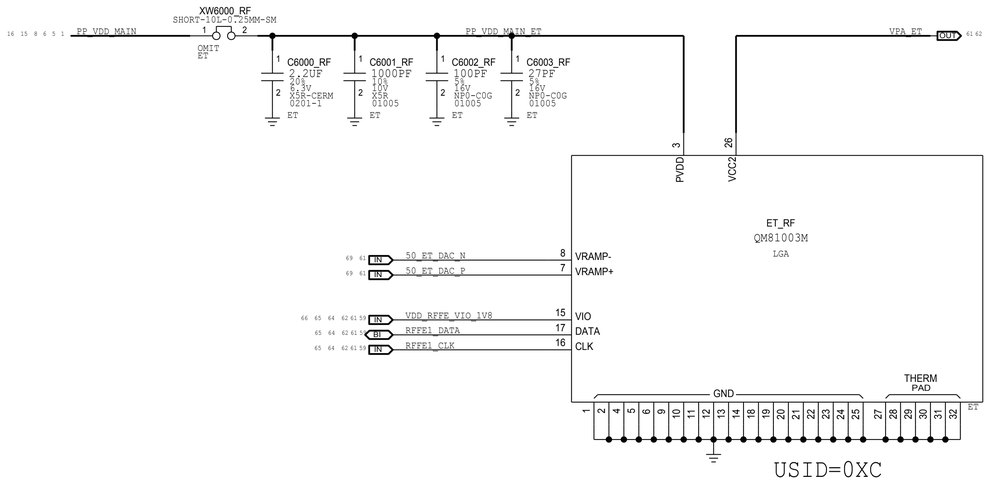

USID=0XC

CONFIDENTIAL AND PROPRIETARY APPLE SYSTEM DESIGN. FOR REFERENCE PURPOSE ONLY - NOT A CHANGE REQUEST

TDD TRANSMIT

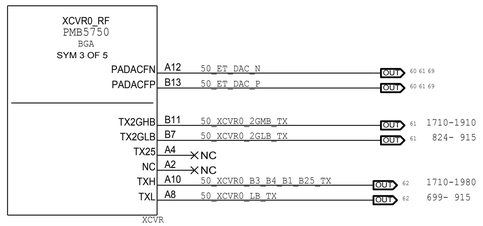

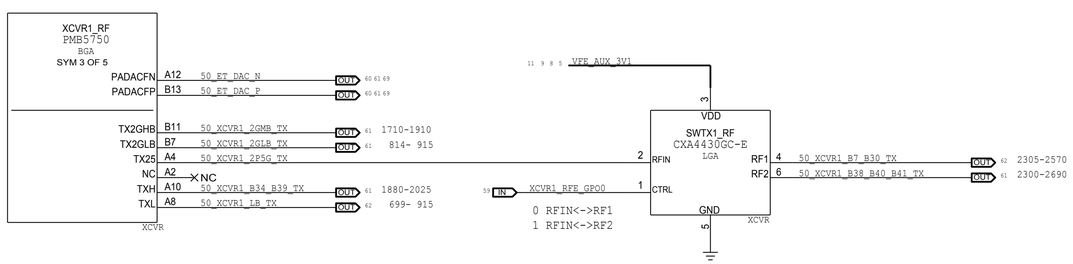

2G PA

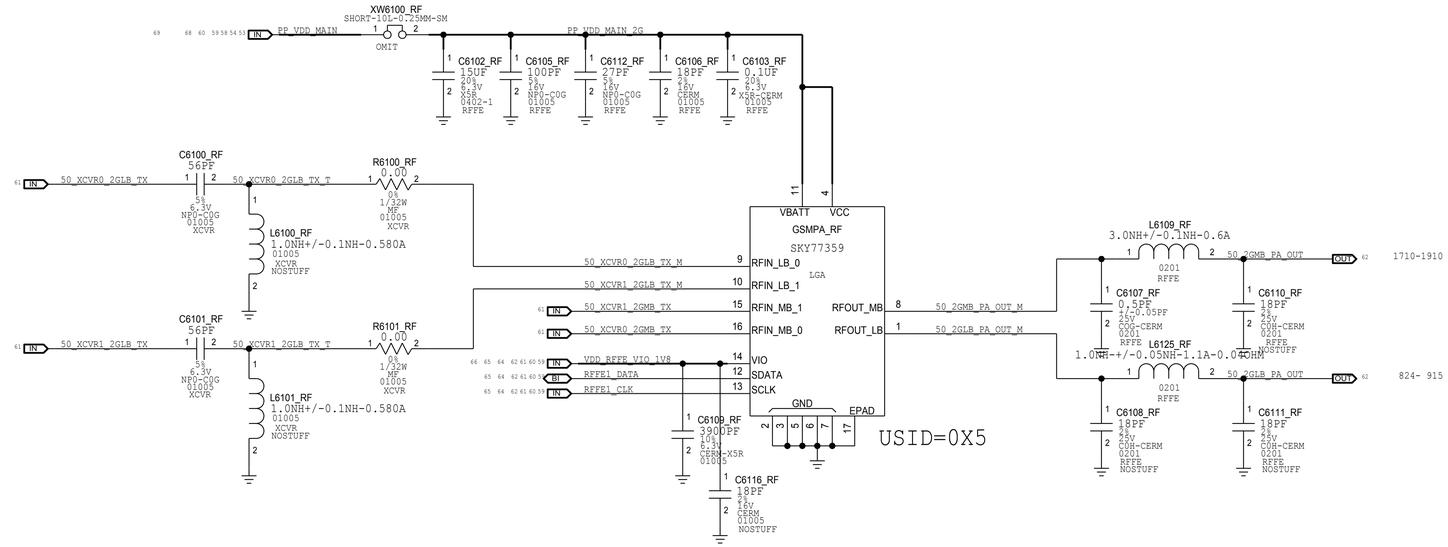

MB HB TDD S-PAD

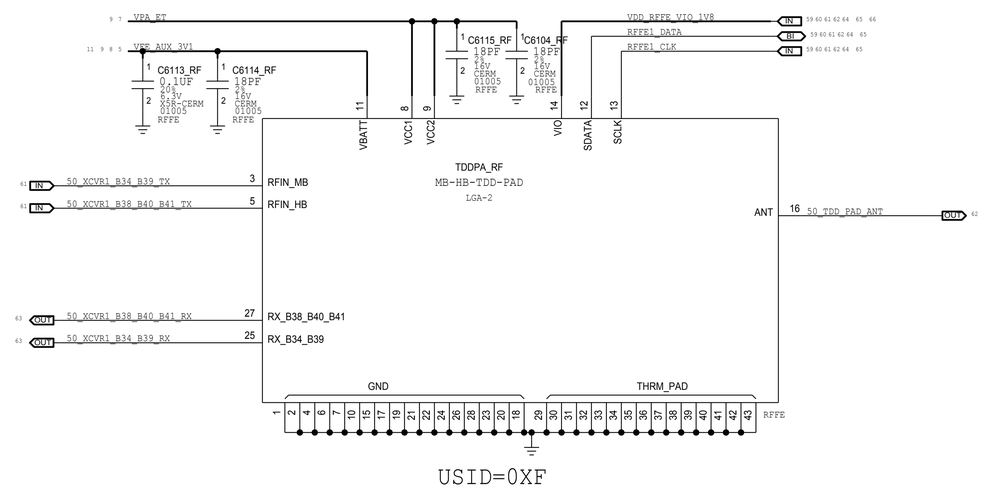

CONFIDENTIAL AND PROPRIETARY APPLE SYSTEM DESIGN. FOR REFERENCE PURPOSE ONLY - NOT A CHANGE REQUEST

FDD TRANSMIT

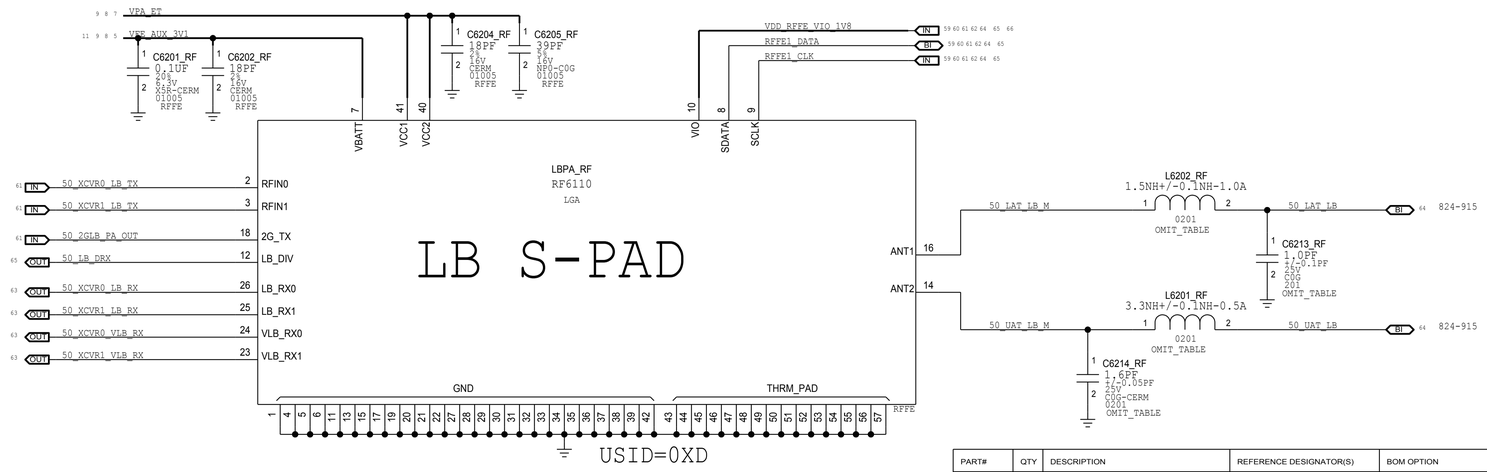

PART#	QTY	DESCRIPTION	REFERENCE DESIGNATOR(S)	BOM OPTION
152S2021	1	IND, 1.5NH, 0201, UH-Q	L6202_RF	D101
131S0278	1	CAP, 1.0PF, 0201, HQ	C6213_RF	D101
152S2004	1	IND, 3.3NH, 0201, UH-Q	L6201_RF	D101
131S0338	1	CAP, 1.6PF, 0201, HF	C6214_RF	D101
152S00151	1	IND, 0.8NH, 0201, UH-Q	L6202_RF	D111
131S0312	1	CAP, 1.2PF, 0201, HQ	C6213_RF	D111
152S2002	1	IND, 2.7NH, 0201, UH-Q	L6201_RF	D111
131S0338	1	CAP, 1.6PF, 0201, HF	C6214_RF	D111

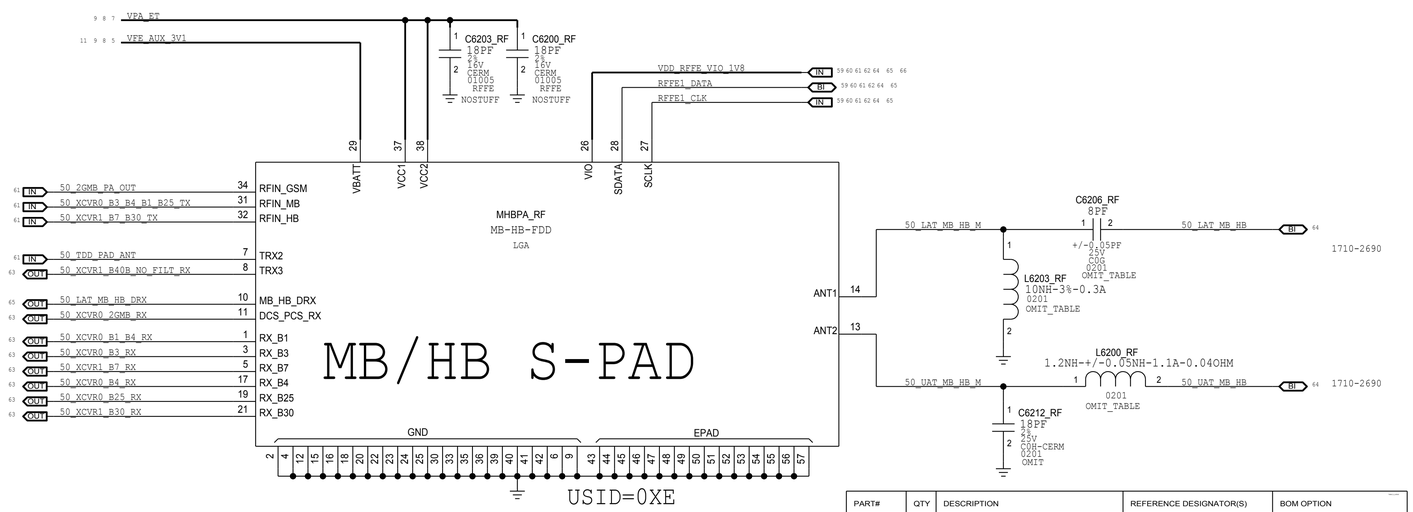

PART#	QTY	DESCRIPTION	REFERENCE DESIGNATOR(S)	BOM OPTION
131S00068	1	CAP, 8.0PF, 0201, HQ	C6206_RF	D101
152S2041	1	IND, 10NH, 0201, UH-Q	L6203_RF	D101
152S00157	1	IND, 1.2NH, 0201, UH-Q	L6200_RF	D101
		NOSTUFF	C6212_RF	D101
131S00068	1	CAP, 8.0PF, 0201, HQ	C6206_RF	D111
152S00020	1	IND, 12NH, 0201, UH-Q	L6203_RF	D111
152S2021	1	IND, 1.5NH, 0201, UH-Q	L6200_RF	D111
		NOSTUFF	C6212_RF	D111

CONFIDENTIAL AND PROPRIETARY APPLE SYSTEM DESIGN. FOR REFERENCE PURPOSE ONLY - NOT A CHANGE REQUEST

PRIMARY RECIEVE

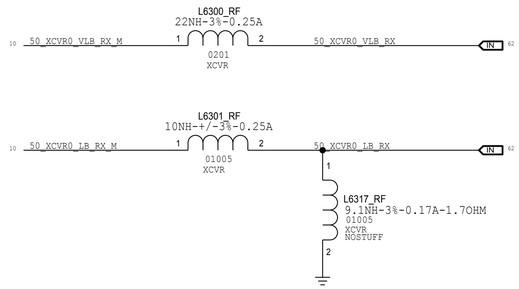

XCVR PRX

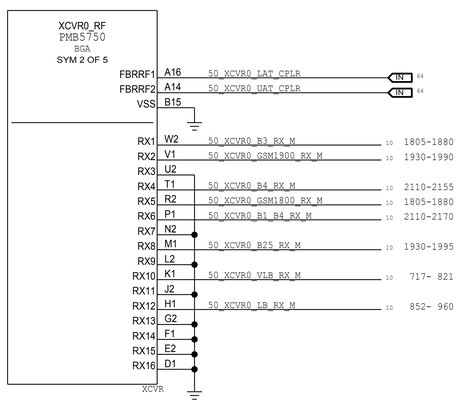

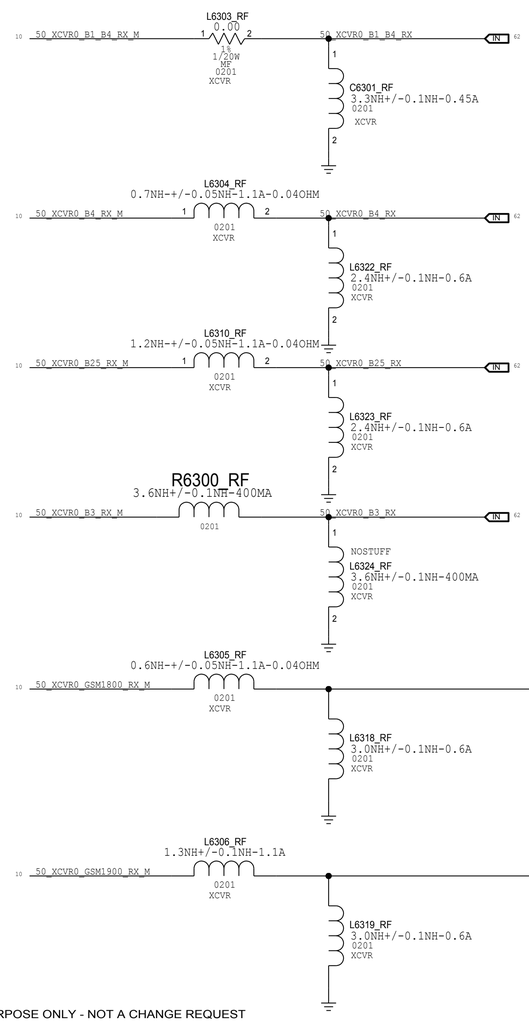

XCVR PRX

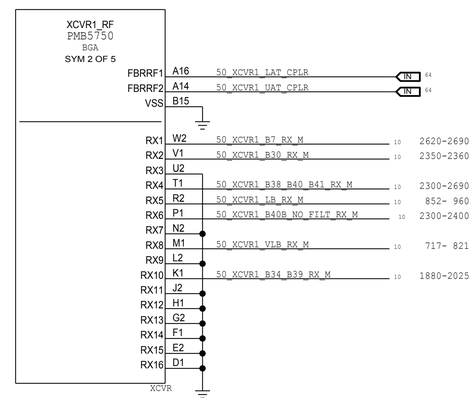

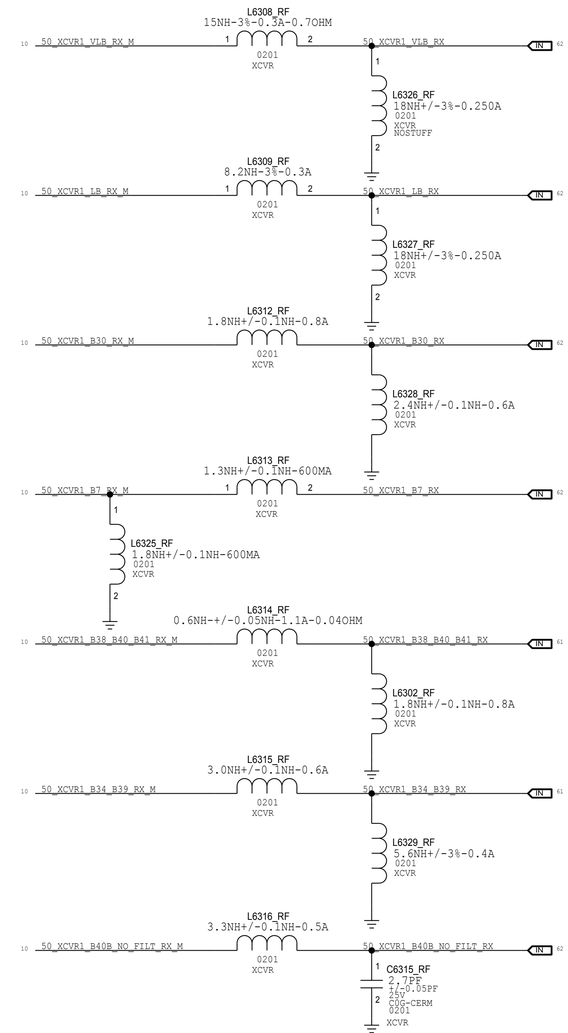

CONFIDENTIAL AND PROPRIETARY APPLE SYSTEM DESIGN. FOR REFERENCE PURPOSE ONLY - NOT A CHANGE REQUEST

LOWER ANTENNA AND COUPLER

LOWER ANTENNA COUPLER

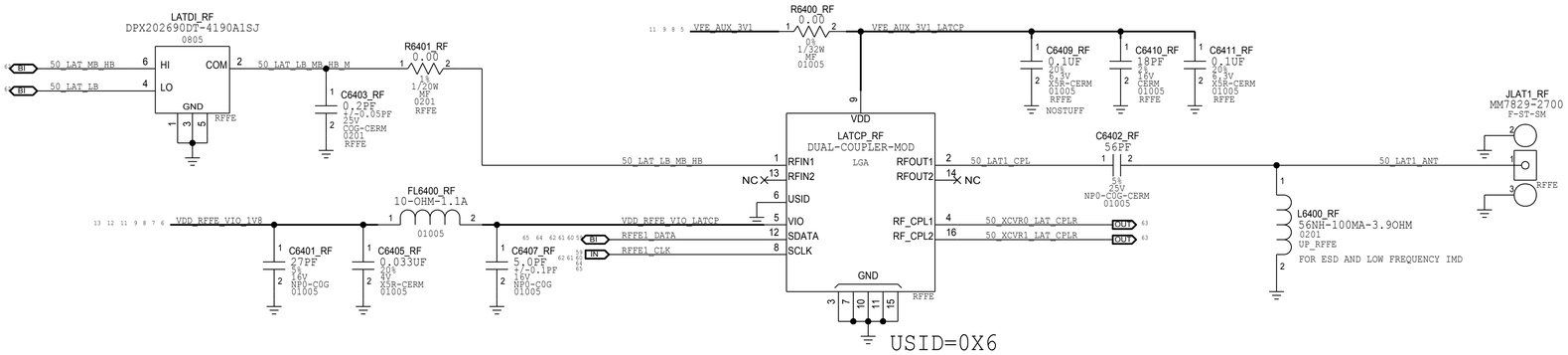

UPPER ANTENNA COUPLER

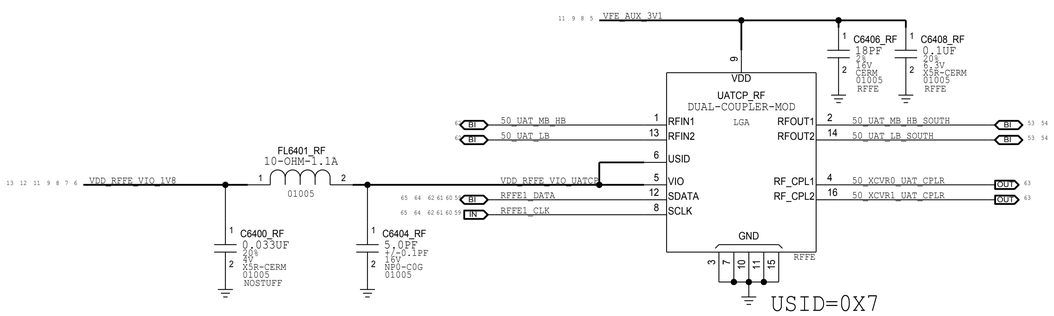

TUNER GPO

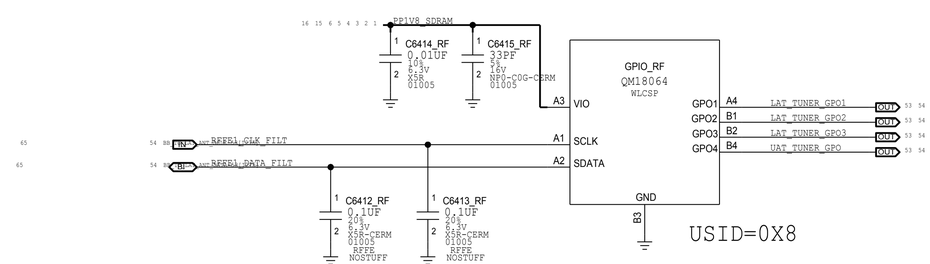

CONFIDENTIAL AND PROPRIETARY APPLE SYSTEM DESIGN. FOR REFERENCE PURPOSE ONLY - NOT A CHANGE REQUEST

DIVERSITY RECEIVE ASM'S

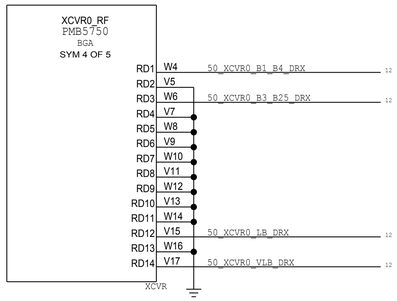

LB DRX ASM

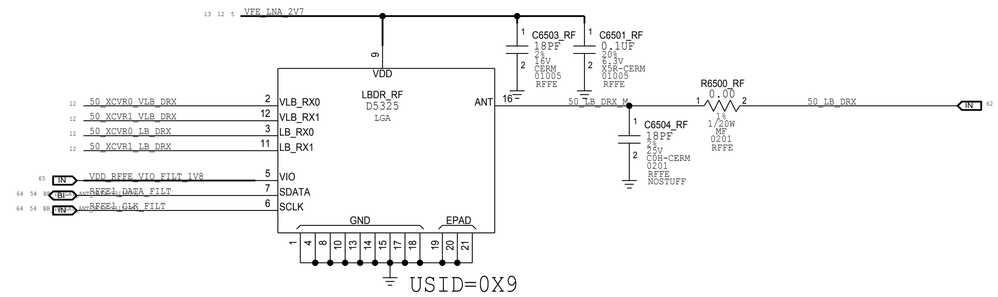

MB HB DRX ASM

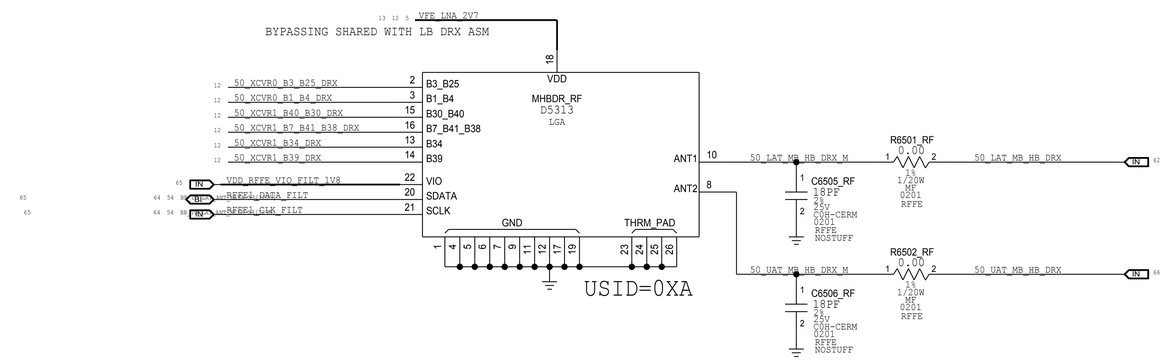

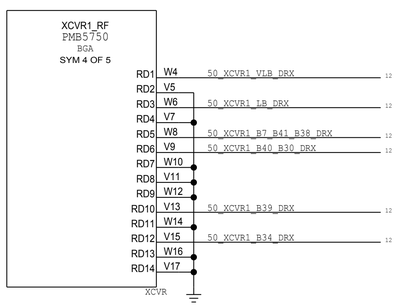

RFFE FILTERING

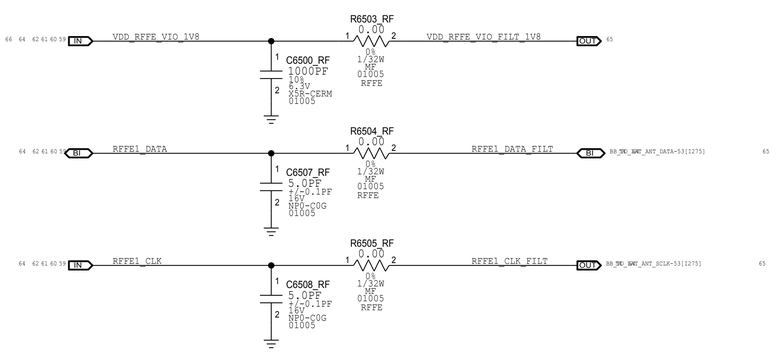

CONFIDENTIAL AND PROPRIETARY APPLE SYSTEM DESIGN. FOR REFERENCE PURPOSE ONLY - NOT A CHANGE REQUEST

DIVERSITY RECEIVE LNAS

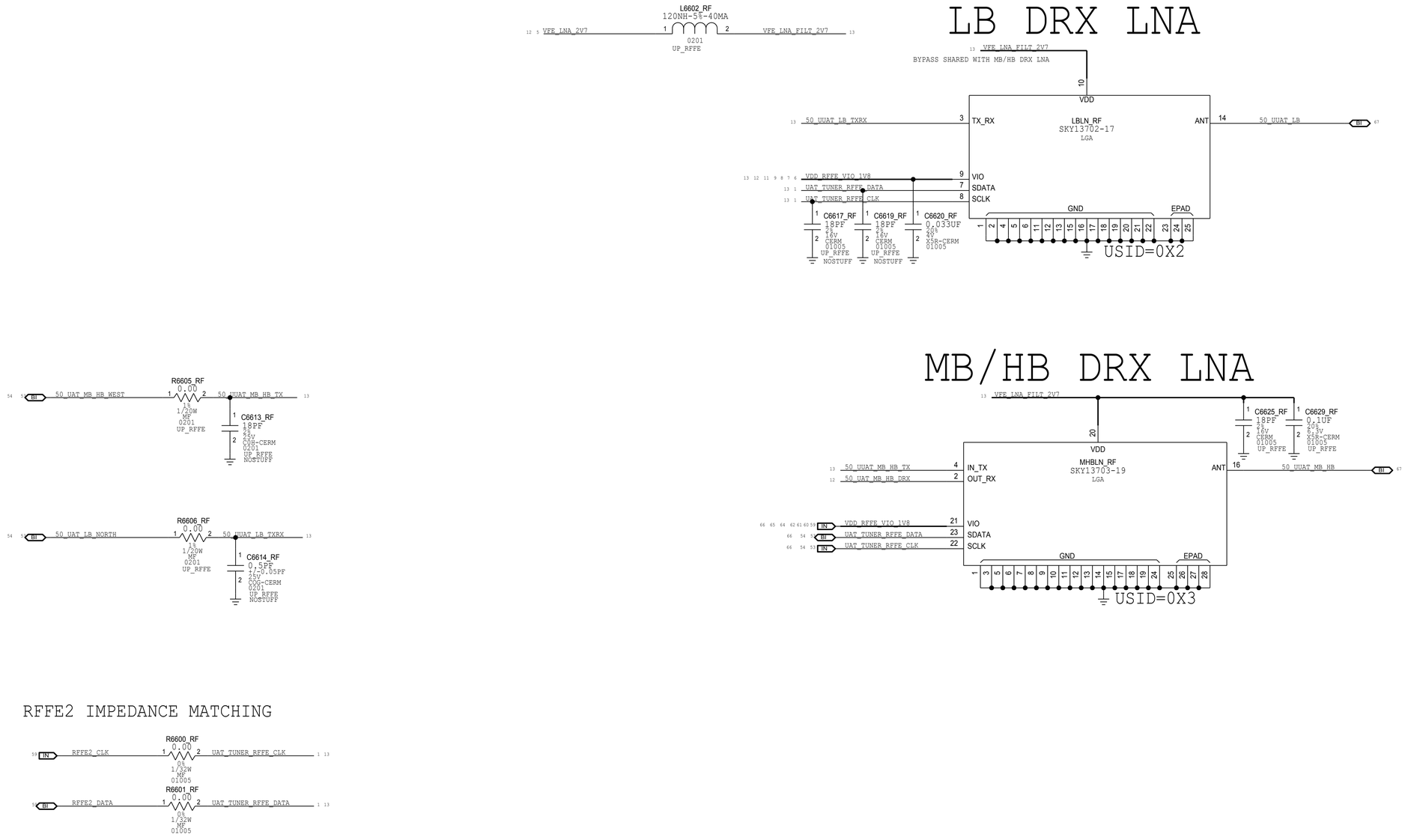

CONFIDENTIAL AND PROPRIETARY APPLE SYSTEM DESIGN. FOR REFERENCE PURPOSE ONLY - NOT A CHANGE REQUEST

UPPER ANTENNA FEEDS

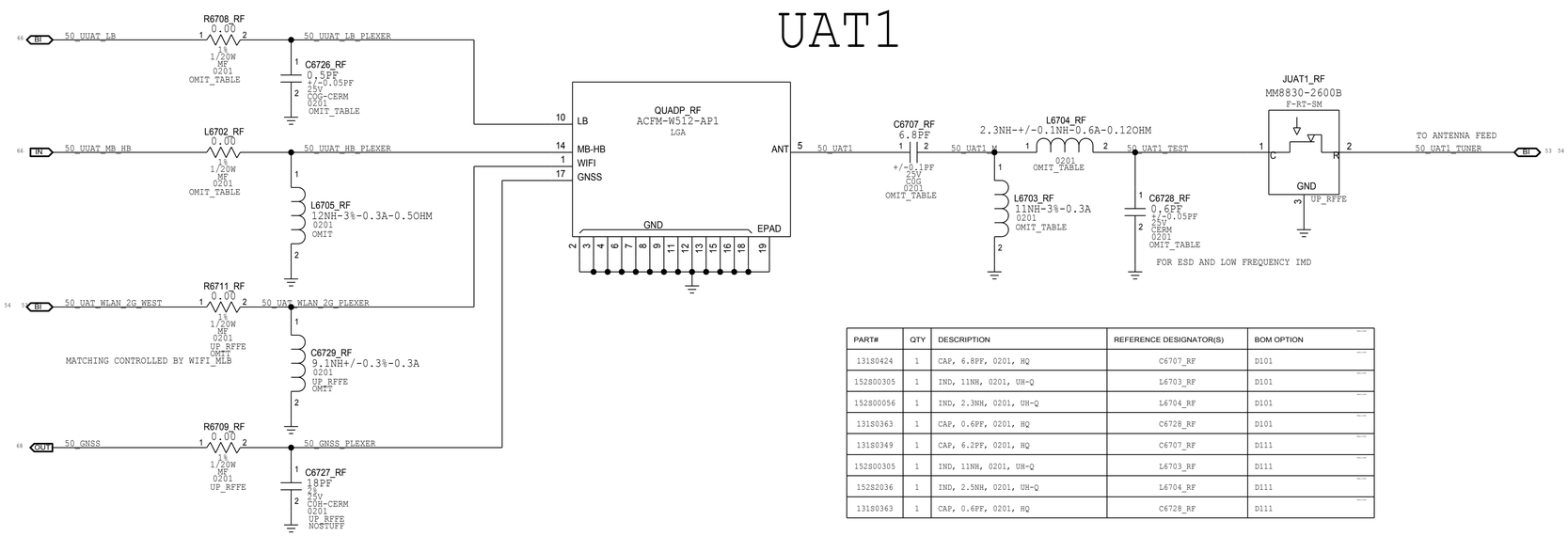

PART#	QTY	DESCRIPTION	REFERENCE DESIGNATOR(S)	BOM OPTION
118S0724	1	RES, 00HM, 0201	R6708_RF	D101
131S0425	1	CAP, 0.5PF, 0201, HQ	C6726_RF	D101
118S0724	1	RES, 00HM, 0201	L6702_RF	D101
152S00020	1	IND, 12NH, 0201, UH-Q	L6705_RF	D101
118S0724	1	RES, 00HM, 0201	R6708_RF	D111
131S0425	1	CAP, 0.5PF, 0201, HQ	C6726_RF	D111
118S0724	1	RES, 00HM, 0201	L6702_RF	D111
152S00020	1	IND, 12NH, 0201, UH-Q	L6705_RF	D111

PART#	QTY	DESCRIPTION	REFERENCE DESIGNATOR(S)	BOM OPTION
131S0424	1	CAP, 6.8PF, 0201, HQ	C6707_RF	D101
152S00305	1	IND, 11NH, 0201, UH-Q	L6703_RF	D101
152S00056	1	IND, 2.3NH, 0201, UH-Q	L6704_RF	D101
131S0363	1	CAP, 0.6PF, 0201, HQ	C6728_RF	D101
131S0349	1	CAP, 6.2PF, 0201, HQ	C6707_RF	D111
152S00305	1	IND, 11NH, 0201, UH-Q	L6703_RF	D111
152S2036	1	IND, 2.5NH, 0201, UH-Q	L6704_RF	D111
131S0363	1	CAP, 0.6PF, 0201, HQ	C6728_RF	D111

CONFIDENTIAL AND PROPRIETARY APPLE SYSTEM DESIGN. FOR REFERENCE PURPOSE ONLY - NOT A CHANGE REQUEST

GNSS LNA + RECEIVER

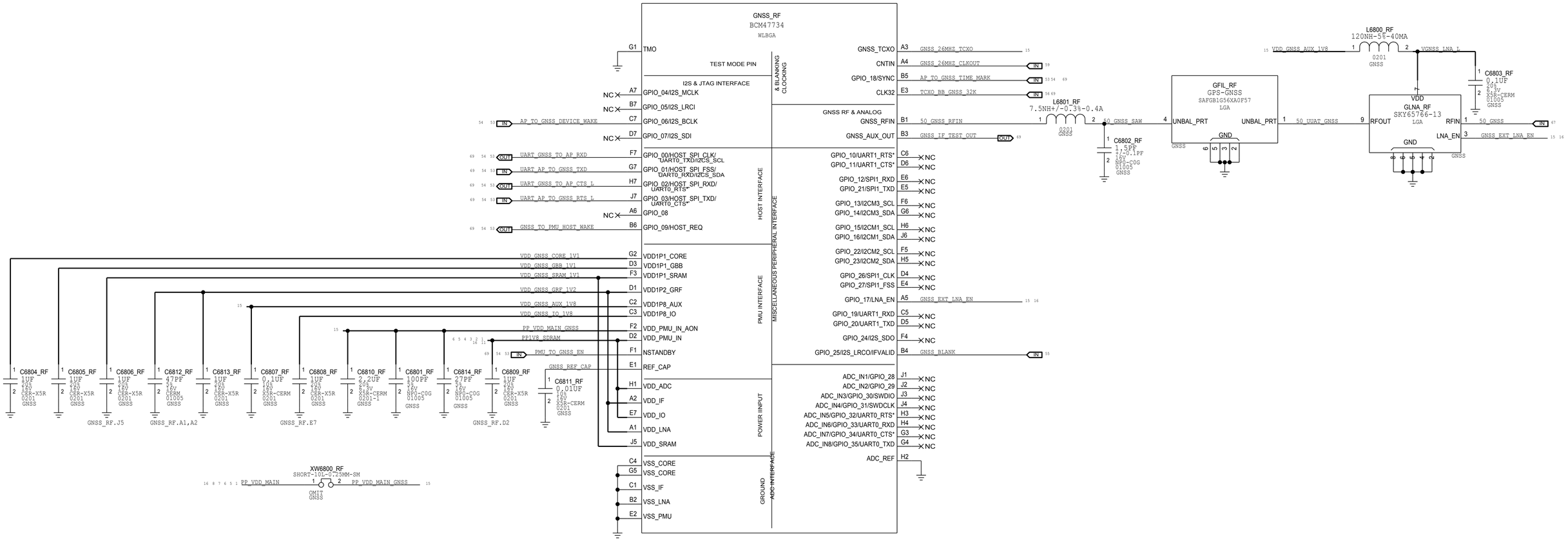

TCXO

KEEP AWAY FROM HEAT SOURCES

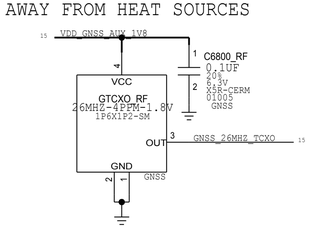

CONFIDENTIAL AND PROPRIETARY APPLE SYSTEM DESIGN. FOR REFERENCE PURPOSE ONLY - NOT A CHANGE REQUEST

MLB TEST POINTS

BASEBAND

PP6901_RF P2MM-NSM SM 1 AP_TO_BBPMU_SDWN_L 1 2 5 OMIT
PP6903_RF P2MM-NSM SM 1 BBPMU_PWRGOOD 3 5 6 OMIT
PP6904_RF P2MM-NSM SM 1 BBPMU_XG_RESET_L 3 5 OMIT
PP6905_RF P2MM-NSM SM 1 BBPMU_XG_RESET_SD_L 3 5 OMIT
PP6906_RF P2MM-NSM SM 1 TCXO_BB_GNSS_32K 3 15 OMIT
PP6909_RF P2MM-NSM SM 1 BB_DEBUG_ERROR 2 OMIT
PP6961_RF P2MM-NSM SM 1 AP_TO_BB_MESA_ON 1 2 OMIT
PP6962_RF P2MM-NSM SM 1 BB_TO_AP_GSM_TXBURST 1 2 OMIT
PP6963_RF P2MM-NSM SM 1 AP_TO_BB_TIME_MARK 1 2 OMIT

XCVR

PP6931_RF P2MM-NSM SM 1 SYSCLK_26MHZ 2 6 OMIT

ETIC

PP6932_RF P2MM-NSM SM 1 50_ET_DAC_P 7 8 OMIT
PP6933_RF P2MM-NSM SM 1 50_ET_DAC_N 7 8 OMIT

GNSS

PP6937_RF P2MM-NSM SM 1 GNSS_EXT_LNA_EN 15 OMIT
PP6936_RF P2MM-NSM SM 1 FMU_TO_GNSS_EN 1 15 OMIT
PP6938_RF P2MM-NSM SM 1 UART_GNSS_TO_AP_RXD 1 15 OMIT
PP6939_RF P2MM-NSM SM 1 UART_AP_TO_GNSS_TXD 1 15 OMIT
PP6964_RF P2MM-NSM SM 1 UART_GNSS_TO_AP_CTS_L 1 15 OMIT
PP6965_RF P2MM-NSM SM 1 UART_AP_TO_GNSS_RTS_L 1 15 OMIT
PP6966_RF P2MM-NSM SM 1 AP_TO_GNSS_TIME_MARK 1 15 OMIT
PP6940_RF P2MM-NSM SM 1 GNSS_IF_TEST_OUT 15 OMIT
PP6945_RF P2MM-NSM SM 1 GNSS_TO_PMU_HOST_WAKE 1 15 OMIT

BBPMU

PP6935_RF P2MM-NSM SM 1 BBPMU_VCLK 2 5 OMIT
PP6954_RF P2MM-NSM SM 1 BBPMU_VDIO 2 5 OMIT

PCIE

PP6915_RF P2MM-NSM SM 1 100_PCIE_AP_TO_BB_TX_P 1 2 OMIT
PP6916_RF P2MM-NSM SM 1 100_PCIE_AP_TO_BB_TX_N 1 2 OMIT
PP6918_RF P2MM-NSM SM 1 100_PCIE_BB_TO_AP_RX_N 1 2 OMIT
PP6919_RF P2MM-NSM SM 1 PCIE_AP_TO_BB_PERST_L 1 2 16 OMIT
PP6920_RF P2MM-NSM SM 1 PCIE_AP_BI_BB_CLKREQ_L 1 2 OMIT
PP6921_RF P2MM-NSM SM 1 PCIE_BB_TO_PMU_WAKE_L 1 2 OMIT

DIGRF

PP6950_RF P2MM-NSM SM 1 90_DIGRF_M1_TX_P 2 6 OMIT
PP6951_RF P2MM-NSM SM 1 90_DIGRF_M1_TX_N 2 6 OMIT
PP6952_RF P2MM-NSM SM 1 90_DIGRF_A1_RX1_P 2 6 OMIT
PP6953_RF P2MM-NSM SM 1 90_DIGRF_A1_RX1_N 2 6 OMIT

PCIE GND

PP6948_RF P2MM-NSM SM 1 OMIT
PP6949_RF P2MM-NSM SM 1 OMIT

SIM CARD CONNECTOR

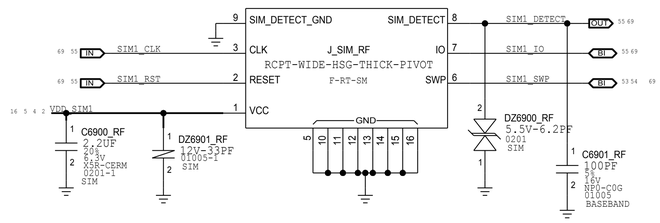

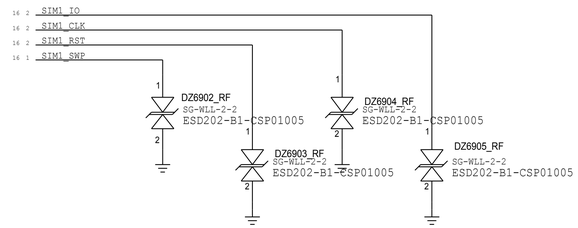

HARDWARE ID

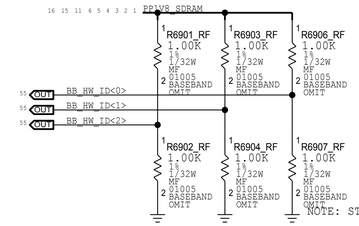

DEV CONFIG

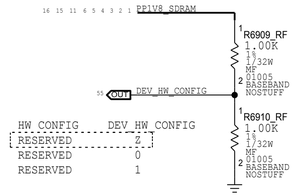

HW_CONFIG	DEV_HW_CONFIG
RESERVED	Z
RESERVED	0
RESERVED	1

NOTE: STUFFING FOR HWID IS IN RADIO_MLB_FF SUB-DESIGN

HARDWARE	HW_ID<2:0>	HARDWARE	HW_ID<2:0>	HARDWARE	HW_ID<2:0>
RF DEV2	0 0 Z	ICE16 PROTO0	0 0 0	ICE16.1 PROTO1	Z Z 1
RF DEV2.1	0 Z 0	ICE16 PROTO0 ES2	0 0 1	ICE16.1 PROTO2	Z 1 Z
RF DEV3	0 Z Z	ICE16 PROTO1	0 1 0	ICE16.1 EVT	Z 1 1
RF DEV4	Z 0 0	ICE16 PROTO2	0 1 1	ICE16.2 EVT	1 Z Z
RF DEV4.1	Z 0 Z	ICE16 PROTO2 ES2.2	1 0 0	ICE16.1 EVT2	1 Z 1
RF DEV4.2	Z Z 0	ICE16 EVT	1 0 1	ICE16.2 EVT2	1 1 Z
RF DEV5	Z Z Z	ICE16 EVT2 CARRIER	1 1 0	ICE16.1 DVT/PVT	0 1 Z
RF DEV5.1	0 Z 1	ICE16 DVT/PVT	1 1 1	ICE16.2 DVT/PVT	Z 0 1

BOOTCFG

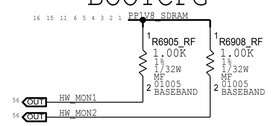

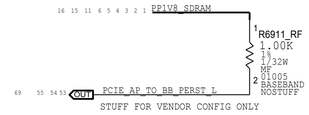

STUFF FOR VENDOR CONFIG ONLY

	HW_MON1	HW_MON2	TRIG_IN
NAND	0	0	1
FLASHLESS	1	0	1
FLASHLESS WDOG DIS	1	1	0
NAND	1	1	1

BOOTSTRAPS ARE INTERNALLY PULLED DOWN

DEBUG CONNECTOR

MLB 516S1185
FLEX 516S1184

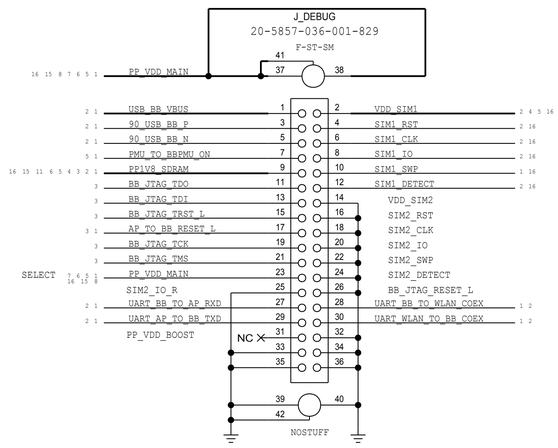

8 7 6 5 4 3 2 1

D

C

B

A

8 7 6 5 4 3 2 1

8 7 6 5 4 3 2 1

D

C

B

A

8 7 6 5 4 3 2 1

8 7 6 5 4 3 2 1

D

C

B

A

8 7 6 5 4 3 2 1

8 7 6 5 4 3 2 1

D

C

B

A

8 7 6 5 4 3 2 1

1. ALL RESISTANCE VALUES ARE IN OHMS, 0.1 WATT +/- 5%.
2. ALL CAPACITANCE VALUES ARE IN MICROFARADS.
3. ALL CRYSTALS & OSCILLATOR VALUES ARE IN HERTZ.

REV	ECN	DESCRIPTION OF REVISION	CK APPD / DATE
5	0006232160	ENGINEERING RELEASED	2016-05-16

STOCKHOLM MLB
APRIL 11, 2016

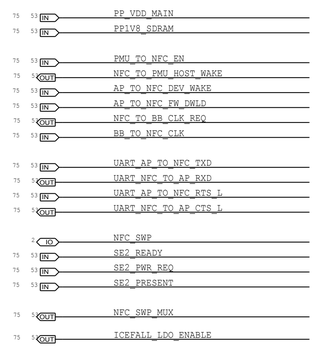

ALTERNATES

PART NUMBER	ALTERNATE FOR PART NUMBER	REFERENCE DESIGNATOR(S)	DESCRIPTION	BOM OPTION
132S0436	132S0400	C7504_RF	0.22UF 20% 6.3V 01005	?

BOM OPTIONS

PART#	QTY	DESCRIPTION	REFERENCE DESIGNATOR(S)	BOM OPTION
131S0883	1	220PF, 0201 2% 50V	C7514_RF	D101
131S00055	1	22PF, 0201 2% 50V	C7512_RF	D101
131S00117	1	120PF, 0201 2% 50V	C7518_RF	D101
131S00026	1	820PF, 0201 2% 50V	C7516_RF	D101
131S0883	1	220PF, 0201 2% 50V	C7514_RF	D10_JP
131S00055	1	22PF, 0201 2% 50V	C7512_RF	D10_JP
131S00017	1	47PF, 0201 2% 50V	C7518_RF	D10_JP
131S0825	1	560PF, 0201 2% 50V	C7516_RF	D10_JP
131S0883	1	220PF, 0201 2% 50V	C7514_RF	D10_ROW
131S00055	1	22PF, 0201 2% 50V	C7512_RF	D10_ROW
131S00117	1	120PF, 0201 2% 50V	C7518_RF	D10_ROW
131S00026	1	820PF, 0201 2% 50V	C7516_RF	D10_ROW

PART#	QTY	DESCRIPTION	REFERENCE DESIGNATOR(S)	BOM OPTION
131S00081	1	270PF, 0201 2% 25V	C7514_RF	D111
131S0883	1	220PF, 0201 2% 50V	C7518_RF	D111
131S00026	1	820PF, 0201 2% 50V	C7516_RF	D111
131S00081	1	270PF, 0201 2% 25V	C7514_RF	D11_JP
131S0731	1	100PF, 0201 2% 50V	C7518_RF	D11_JP
131S00033	1	680PF, 0201 2% 50V	C7516_RF	D11_JP
131S00081	1	270PF, 0201 2% 25V	C7514_RF	D11_ROW
131S0883	1	220PF, 0201 2% 50V	C7518_RF	D11_ROW
131S00026	1	820PF, 0201 2% 50V	C7516_RF	D11_ROW

STOCKHOLM

NFC CONTROLLER

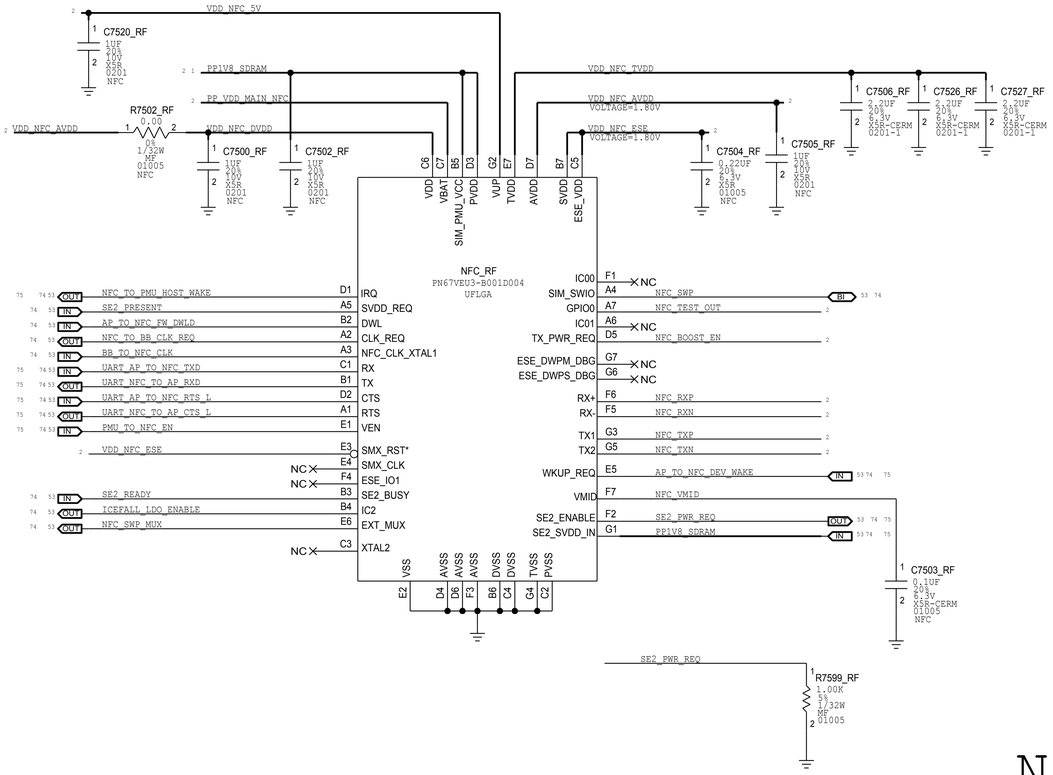

5V BOOSTER

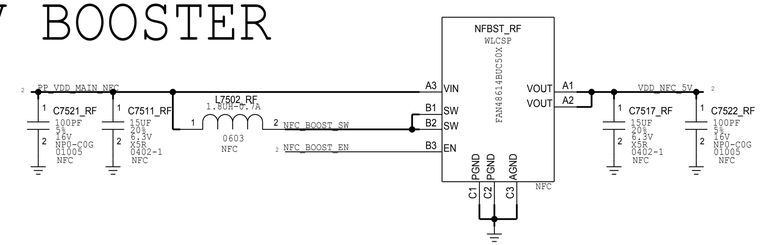

NFC FRONT END

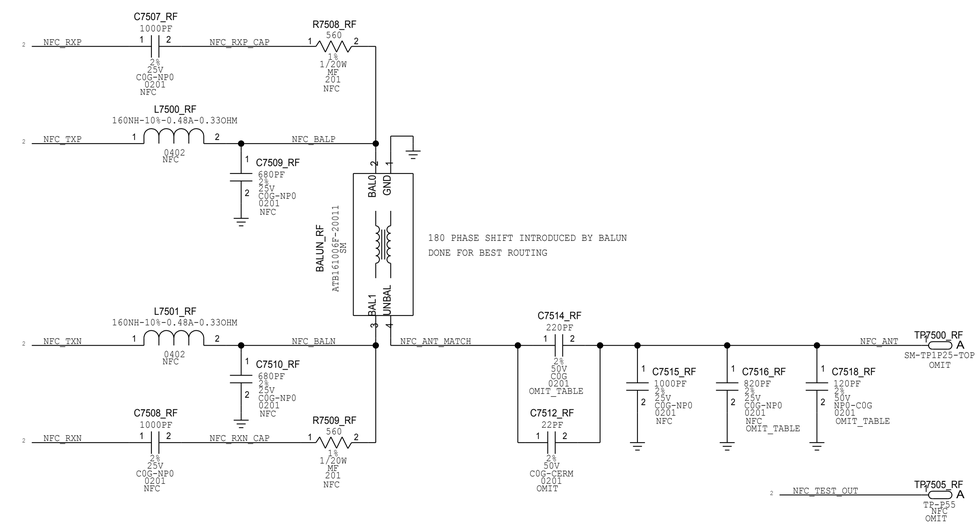

NFC LOAD SWITCH

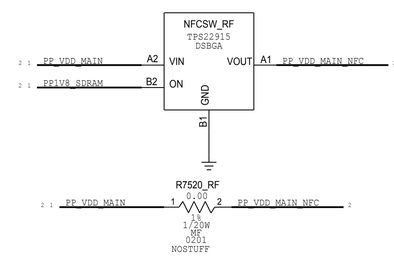

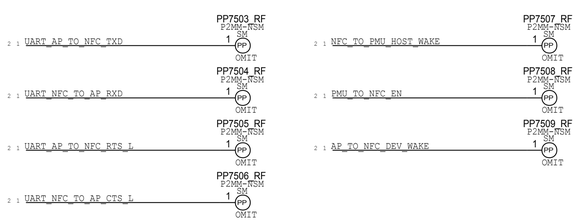

1. ALL RESISTANCE VALUES ARE IN OHMS, 0.1 WATT +/- 5%.
2. ALL CAPACITANCE VALUES ARE IN MICROFARADS.
3. ALL CRYSTALS & OSCILLATOR VALUES ARE IN HERTZ.

REV	ECN	DESCRIPTION OF REVISION	CK APPD / DATE
5	0006232160	ENGINEERING RELEASED	2016-05-16

D111 RADIO MLB FF

Mon May 16 17:43:10 2016

PDF PAGE	CONTENTS
2	METROCIRC

SCH: 951-02180
BOM: 939-01837
PCB: 920-XXXXX

CONFIDENTIAL AND PROPRIETARY APPLE SYSTEM DESIGN. FOR REFERENCE PURPOSE ONLY - NOT A CHANGE REQUEST

METROCIRC

D111 NORTH-SOUTH METROCIRC
339S00147

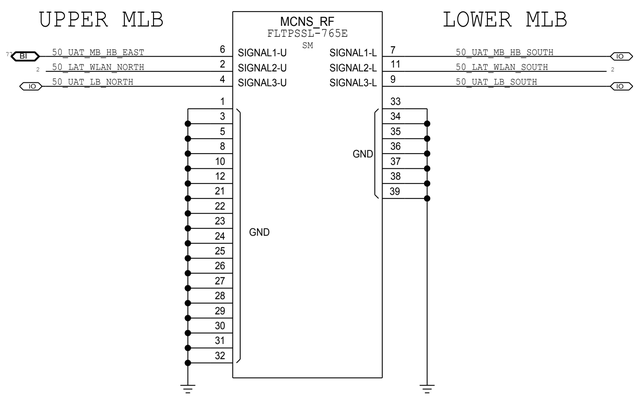

D111 EAST-WEST METROCIRC
339S00146

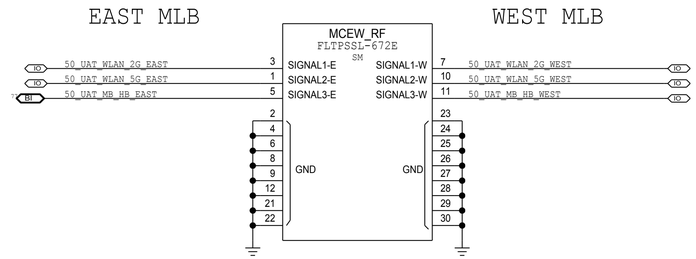

WIFI LOWER ANTENNA FEED

COAX

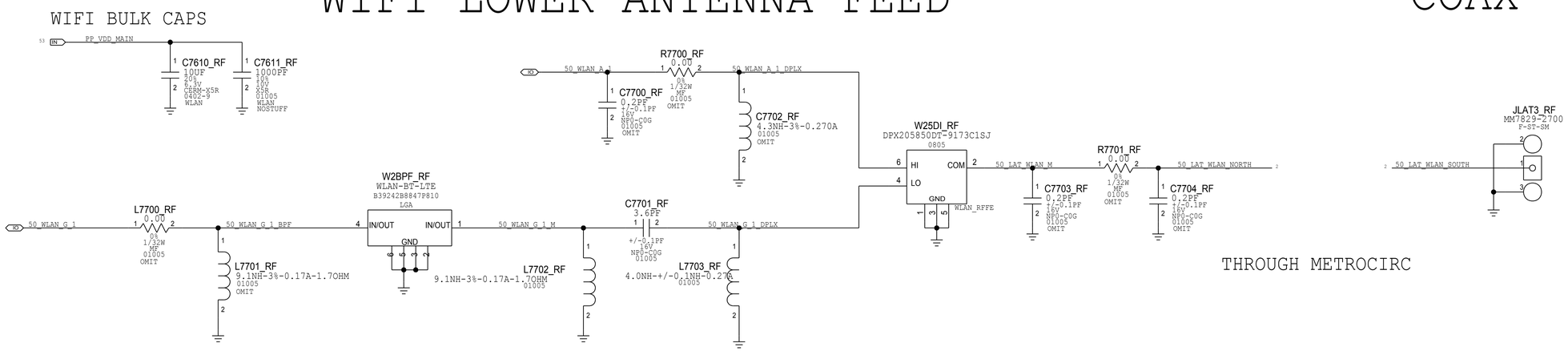

ICE16.1/2 EVT2

MATCHING CONTROLLED BY WIFI_MLB

PART#	QTY	DESCRIPTION	REFERENCE DESIGNATOR(S)	BOM OPTION
11880608	2	RES, MF, 1K OHM, 1%, 1/32W, 01005	R6901_RF, R6906_RF	

UAT TUNER FLEX

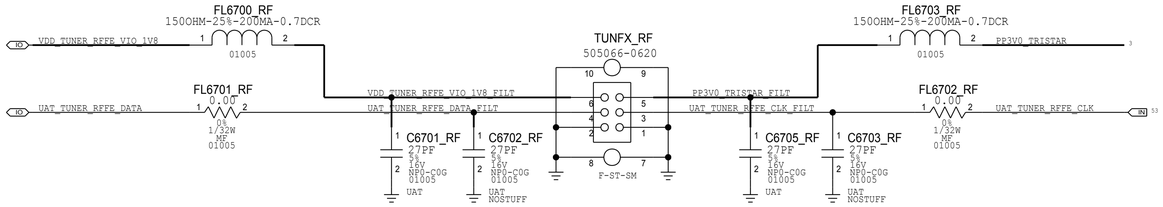

PINOUT IS ROTATED 180 COMPARED TO D101

ALTERNATES

PART NUMBER	ALTERNATE FOR PART NUMBER	BOM OPTION	REF DES	COMMENTS:
152S00482	152S00490	ALTERNATE	L8007_RF	MURATA LQW03CAR56J00

ALT UAT1 GND

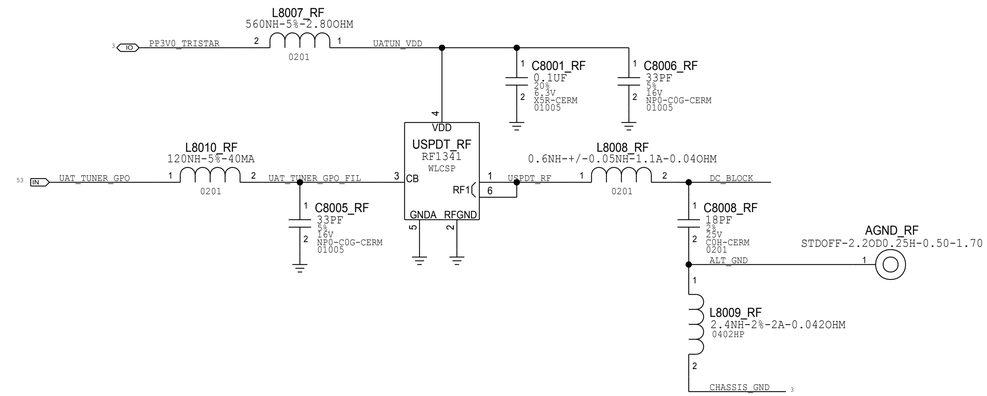

UAT TUNER

REMOVED

USID=0XC

5G WIFI STANDOFF

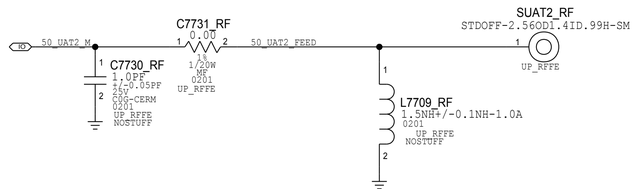

LB/MLB/GNSS/MB/HB STANDOFF

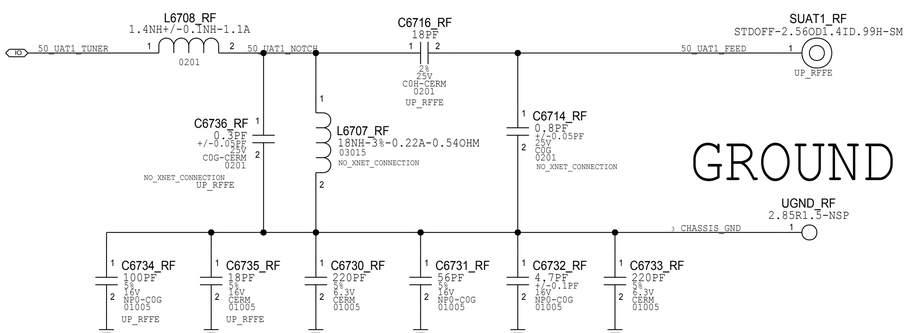

GROUND RING

1. ALL RESISTANCE VALUES ARE IN OHMS, 0.1 WATT +/- 5%.
2. ALL CAPACITANCE VALUES ARE IN MICROFARADS.
3. ALL CRYSTALS & OSCILLATOR VALUES ARE IN HERTZ.

REV	ECN	DESCRIPTION OF REVISION	CK APPD / DATE
5	0006232160	ENGINEERING RELEASED	2016-05-16

D1X WIFI MLB (PERENNIAL) FEBRUARY 1, 2016

PDF PAGE	CSA PAGE	CONTENTS
2	76	PERENNIAL
3	77	WIFI FRONT-END

BOM OPTIONS:

D10_JP:

PART#	QTY	DESCRIPTION	REFERENCE DESIGNATOR(S)	CRITICAL	BOM OPTION
131S0648	1	CAP,CER,0.3PF,+/-0.05,01005	C7705_RF	CRITICAL	D10_JP
152S00029	1	IND,1.1NH,UH-Q,01005	R7703_RF	CRITICAL	D10_JP
131S0893	1	CAP,CER,0.2PF,+/-0.05,01005	C7706_RF	CRITICAL	D10_JP
117S0161	1	RES,MF,0 OHM,1/32W,01005	R7711_RF	CRITICAL	D10_JP
117S0161	1	RES,MF,0 OHM,1/32W,01005	R7702_RF	CRITICAL	D10_JP
152S1980	1	IND,1.0NH,UH-Q,01005	R7704_RF	CRITICAL	D10_JP
131S0404	1	CAP,3.9PF,+/-1.0PF,01005	R6711_RF	CRITICAL	D10_JP
152S2061	1	IND,7.5NH,UH-Q,01005	C6729_RF	CRITICAL	D10_JP
117S0161	1	RES,MF,0 OHM,1/32W,01005	R7700_RF	CRITICAL	D10_JP
152S2043	1	IND,6.2NH,UH-Q,01005	C7702_RF	CRITICAL	D10_JP
152S1998	1	IND, 0.8NH,UH-Q,01005	L7700_RF	CRITICAL	D10_JP
152S2043	1	IND,6.2NH,UH-Q,01005	L7701_RF	CRITICAL	D10_JP
117S0161	1	RES,MF,0 OHM,1/32W,01005	R7701_RF	CRITICAL	D10_JP

NOSTUFF:C7729_RF,C7711_RF,C7709_RF,C7710_RF, C7707_RF, C7708_RF
C7700_RF, C7703_RF,C7704_RF

D10_ROW:

PART#	QTY	DESCRIPTION	REFERENCE DESIGNATOR(S)	CRITICAL	BOM OPTION
131S0648	1	CAP,CER,0.3PF,+/-0.05,01005	C7705_RF	CRITICAL	D10_ROW
152S00029	1	IND,1.1NH,UH-Q,01005	R7703_RF	CRITICAL	D10_ROW
131S0893	1	CAP,CER,0.2PF,+/-0.05,01005	C7706_RF	CRITICAL	D10_ROW
117S0161	TRUE	RES,MF,0 OHM,1/32W,01005	R7711_RF	CRITICAL	D10_ROW
117S0161	TRUE	RES,MF,0 OHM,1/32W,01005	R7702_RF	CRITICAL	D10_ROW
152S1988	TRUE	IND,2.4NH,UH-Q,01005	R7704_RF	CRITICAL	D10_ROW
117S0161	TRUE	RES,MF,0 OHM,1/32W,01005	R6711_RF	CRITICAL	D10_ROW
152S1853	TRUE	IND,9.1NH,UH-Q,01005	C6729_RF	CRITICAL	D10_ROW
117S0161	TRUE	RES,MF,0 OHM,1/32W,01005	R7700_RF	CRITICAL	D10_ROW
152S2043	1	IND,6.2NH,UH-Q,01005	C7702_RF	CRITICAL	D10_ROW
152S1998	1	IND, 0.8NH,UH-Q,01005	L7700_RF	CRITICAL	D10_ROW
152S2043	TRUE	IND,6.2NH,UH-Q,01005	L7701_RF	CRITICAL	D10_ROW
117S0161	1	RES,MF,0 OHM,1/32W,01005	R7701_RF	CRITICAL	D10_ROW

NOSTUFF:C7729_RF,C7711_RF,C7709_RF,C7710_RF, C7707_RF, C7708_RF
C7700_RF, C7703_RF,C7704_RF

D101_WIFI:

PART#	QTY	DESCRIPTION	REFERENCE DESIGNATOR(S)	CRITICAL	BOM OPTION
131S0648	1	CAP,CER,0.3PF,+/-0.05,01005	C7705_RF	CRITICAL	D101
152S00029	1	IND,1.1NH,UH-Q,01005	R7703_RF	CRITICAL	D101
131S0893	1	CAP,CER,0.2PF,+/-0.05,01005	C7706_RF	CRITICAL	D101
117S0161	1	RES,MF,0 OHM,1/32W,01005	R7711_RF	CRITICAL	D101
117S0161	1	RES,MF,0 OHM,1/32W,01005	R7702_RF	CRITICAL	D101
152S1988	TRUE 1	IND,2.4NH,UH-Q,01005	R7704_RF	CRITICAL	D101
131S0648	TRUE 1	CAP,CER,0.3PF,+/-0.05PF,01005	C7708_RF	CRITICAL	D101
118S0724	TRUE 1	RES,MF, 0 OHM,1/20W, 0201	R6711_RF	CRITICAL	D101
152S2054	TRUE 1	IND,9.1NH,UH-Q,0201	C6729_RF	CRITICAL	D101
117S0161	1	RES,MF,0 OHM,1/32W,01005	R7700_RF	CRITICAL	D101
152S2043	TRUE 1	IND,6.2NH,UH-Q,01005	C7702_RF	CRITICAL	D101
152S1998	1	IND, 0.8NH,UH-Q,01005	L7700_RF	CRITICAL	D101
152S2043	1	IND,6.2NH,UH-Q,01005	L7701_RF	CRITICAL	D101
117S0161	1	RES,MF,0 OHM,1/32W,01005	R7701_RF	CRITICAL	D101

NOSTUFF: C7729_RF,C7711_RF,C7709_RF,C7710_RF, C7707_RF
C7700_RF, C7703_RF,C7704_RF

D11_JP:

PART#	QTY	DESCRIPTION	REFERENCE DESIGNATOR(S)	CRITICAL	BOM OPTION
152S00273	TRUE	IND,0.6NH,UH-Q,01005	R7703_RF	CRITICAL	D11_JP
152S1976	TRUE	IND,0.7NH,UH-Q,01005	R7711_RF	CRITICAL	D11_JP
131S0400	TRUE	CAP,CER,3.5PF+/-0.1,01005	R7702_RF	CRITICAL	D11_JP
152S1986	TRUE	IND,FILM,2.2NH,UH-Q,01005	R7704_RF	CRITICAL	D11_JP
131S0648	TRUE	CAP,CER,0.3PF,+/-0.05PF,01005	C7708_RF	CRITICAL	D11_JP
131S0593	TRUE	CAP,3.9PF,+/-1.0PF,0201,HI-Q	R6711_RF	CRITICAL	D11_JP
152S2055	TRUE	IND,7.5NH,UH-Q,0201	C6729_RF	CRITICAL	D11_JP
117S0161	TRUE	RES,MF,0 OHM,1/32W,01005	R7700_RF	CRITICAL	D11_JP
117S0161	TRUE	RES,MF,0 OHM,1/32W,01005	L7700_RF	CRITICAL	D11_JP
152S1853	TRUE	IND,9.1NH,UH-Q,01005	L7701_RF	CRITICAL	D11_JP
117S0161	TRUE	RES,MF,0 OHM,1/32W,01005	R7701_RF	CRITICAL	D11_JP
131S0893	TRUE	CAP,CER,0.2PF,+/-0.05PF,01005	C7705_RF	CRITICAL	D11_JP
131S0893	1	CAP,CER,0.2PF,+/-0.05PF,01005	C7729_RF	CRITICAL	D11_JP

NOSTUFF:C7706_RF, C7711_RF,C7709_RF,C7710_RF, C7707_RF
C7700_RF,C7702_RF, C7703_RF,C7704_RF

D11_ROW:

PART#	QTY	DESCRIPTION	REFERENCE DESIGNATOR(S)	CRITICAL	BOM OPTION
152S00273	1	IND,0.6NH,UH-Q,01005	R7703_RF	CRITICAL	D11_ROW
152S1976	1	IND,0.7NH,UH-Q,01005	R7711_RF	CRITICAL	D11_ROW
131S0400	1	CAP,CER,3.5PF+/-0.1,01005	R7702_RF	CRITICAL	D11_ROW
152S1986	TRUE 1	IND,FILM,2.2NH,UH-Q,01005	R7704_RF	CRITICAL	D11_ROW
118S0724	TRUE 1	RES,MF,0 OHM,1/20W,0201	R6711_RF	CRITICAL	D11_ROW
152S2054	TRUE 1	IND,9.1NH,UH-Q,0201	C6729_RF	CRITICAL	D11_ROW
117S0161	1	RES,MF,0 OHM,1/32W,01005	R7700_RF	CRITICAL	D11_ROW
117S0161	1	RES,MF,0 OHM,1/32W,01005	L7700_RF	CRITICAL	D11_ROW
152S1853	1	IND,9.1NH,UH-Q,01005	L7701_RF	CRITICAL	D11_ROW
117S0161	1	RES,MF,0 OHM,1/32W,01005	R7701_RF	CRITICAL	D11_ROW
131S0893	1	CAP,CER,0.2PF,+/-0.05PF,01005	C7705_RF	CRITICAL	D11_ROW
131S0893	1	CAP,CER,0.2PF,+/-0.05PF,01005	C7729_RF	CRITICAL	D11_ROW

NOSTUFF:C7706_RF,C7711_RF,C7709_RF,C7710_RF, C7707_RF, C7708_RF
C7700_RF,C7702_RF, C7703_RF,C7704_RF

D111_WIFI:

PART#	QTY	DESCRIPTION	REFERENCE DESIGNATOR(S)	CRITICAL	BOM OPTION
152S00273	1	IND,0.6NH,UH-Q,01005	R7703_RF	CRITICAL	D111
152S1976	1	IND,0.7NH,UH-Q,01005	R7711_RF	CRITICAL	D111
131S0400	1	CAP,CER,3.5PF+/-0.1,01005	R7702_RF	CRITICAL	D111
152S1986	TRUE 1	IND,FILM,2.2NH,UH-Q,01005	R7704_RF	CRITICAL	D111
118S0724	TRUE 1	RES,MF, 0 OHM,1/20W, 0201	R6711_RF	CRITICAL	D111
152S2054	TRUE 1	IND,9.1NH,UH-Q,0201	C6729_RF	CRITICAL	D111
117S0161	1	RES,MF,0 OHM,1/32W,01005	R7700_RF	CRITICAL	D111
117S0161	1	RES,MF,0 OHM,1/32W,01005	L7700_RF	CRITICAL	D111
152S1853	1	IND,9.1NH,UH-Q,01005	L7701_RF	CRITICAL	D111
117S0161	1	RES,MF,0 OHM,1/32W,01005	R7701_RF	CRITICAL	D111
131S0893	1	CAP,CER,0.2PF,+/-0.05PF,01005	C7705_RF	CRITICAL	D111
131S0893	1	CAP,CER,0.2PF,+/-0.05PF,01005	C7729_RF	CRITICAL	D111

NOSTUFF:C7706_RF,C7711_RF,C7709_RF,C7710_RF, C7707_RF, C7708_RF
C7700_RF,C7702_RF, C7703_RF,C7704_RF

POWER

80 53 IN PP_VDD_MAIN
80 53 IN PP1V8_SDRAM

CLOCKS

80 53 IN PMU_TO_WLAN_32K

CONTROL

80 53 IN PMU_TO_WLAN_REG_ON
80 53 IN PMU_TO_BT_REG_ON
80 8 OUT BT_TO_PMU_HOST_WAKE
80 53 IN AP_TO_BT_WAKE

WLAN PCIE

80 53 IN 100_PCIE_AP_TO_WLAN_REFCLK_P
80 53 IN 100_PCIE_AP_TO_WLAN_REFCLK_N
80 53 IN 100_PCIE_AP_TO_WLAN_TX_P
80 53 IN 100_PCIE_AP_TO_WLAN_TX_N
80 8 OUT 100_PCIE_WLAN_TO_AP_RX_P
80 8 OUT 100_PCIE_WLAN_TO_AP_RX_N
80 53 IN PCIE_AP_TO_WLAN_PERST_L
8 IO PCIE_AP_BI_WLAN_CLKREQ_L
80 8 OUT PCIE_WLAN_TO_PMU_WAKE
80 53 IN AP_TO_WLAN_DEV_WAKE

WLAN UART

80 8 OUT UART_WLAN_TO_AP_RXD
80 53 IN UART_AP_TO_WLAN_TXD
80 8 OUT UART_WLAN_TO_AP_CTS_L
80 53 IN UART_AP_TO_WLAN_RTS_L

BLUETOOTH UART

80 53 IN UART_AP_TO_BT_TXD
80 8 OUT UART_BT_TO_AP_RXD
80 53 IN UART_AP_TO_BT_RTS_L
80 8 OUT UART_BT_TO_AP_CTS_L

AOP

80 53 IN AOP_TO_WLAN_CONTEXT_A
80 53 IN AOP_TO_WLAN_CONTEXT_B

AUDIO

80 53 IN I2S_AP_TO_BT_BCLK
80 53 IN I2S_AP_TO_BT_LRCK
80 OUT I2S_BT_TO_AP_DIN
80 53 IN I2S_AP_TO_BT_DOUT

COEX

80 53 IN UART_BB_TO_WLAN_COEX
80 8 OUT UART_WLAN_TO_BB_COEX

ANTENNA

3 IO 50_UAT_WLAN_5G_WEST
3 IO 50_UAT_WLAN_2G_EAST
3 IO 50_UAT_WLAN_5G_EAST
3 IO 50_WLAN_G_1
3 IO 50_WLAN_A_1
3 IO 50_UAT2_M

CONFIDENTIAL AND PROPRIETARY APPLE SYSTEM DESIGN. FOR REFERENCE PURPOSE ONLY - NOT A CHANGE REQUEST

WIFI/BT

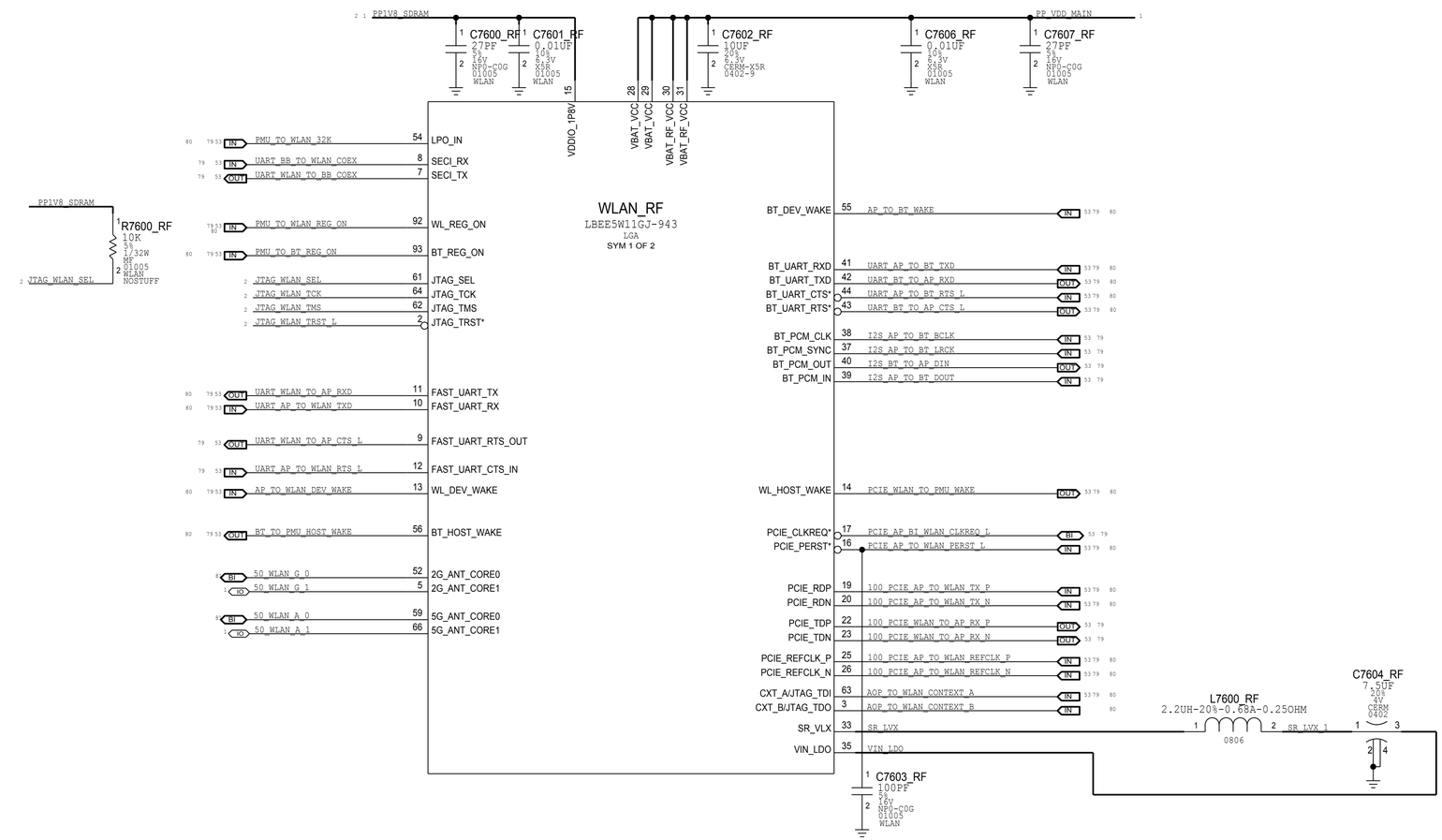

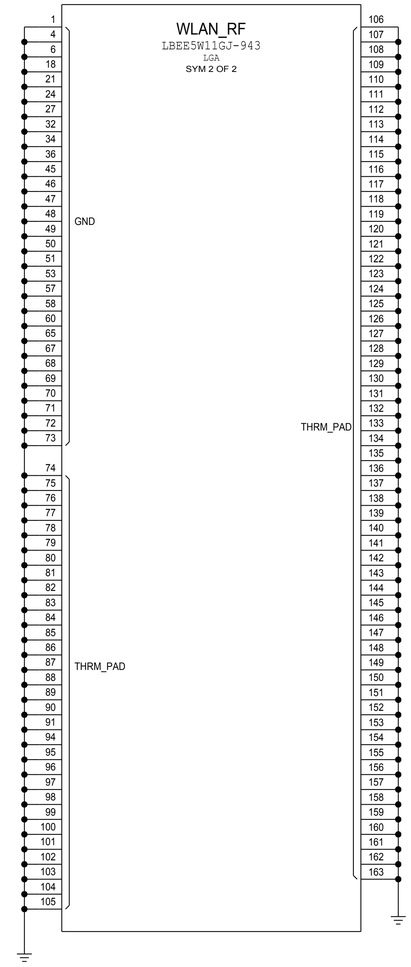

PART NUMBER	ALTERNATE FOR PART NUMBER	BOM OPTION	REF DES	COMMENTS:
339S00201	339S00199	ALTERNATE	WLAN_RF	ALT WIFI/BT MODULE

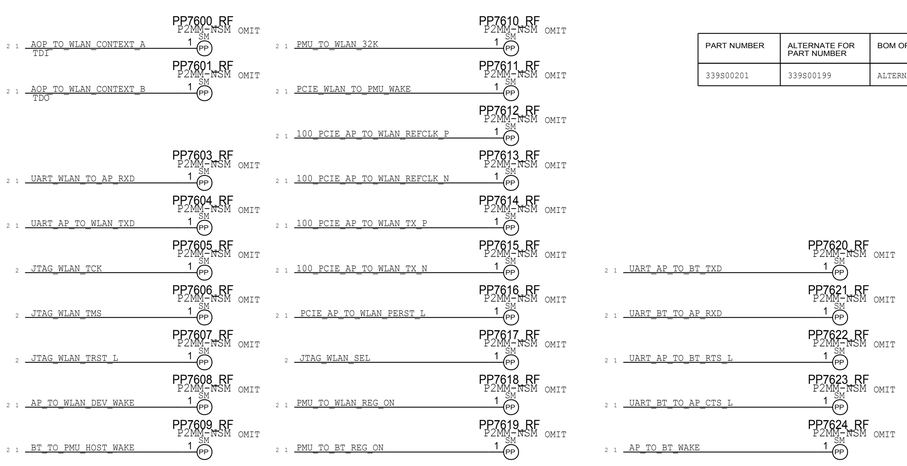
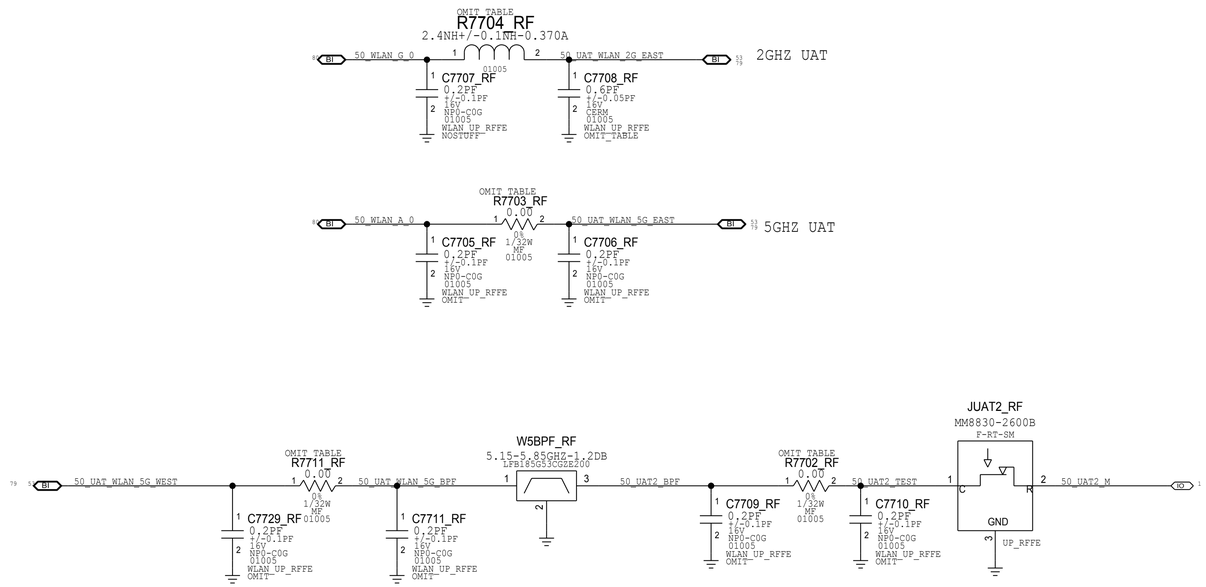
WIFI UPPER ANTENNA FEEDS